Finally, the answer you've been looking for is here

A-TAP SERIES

Volume 11

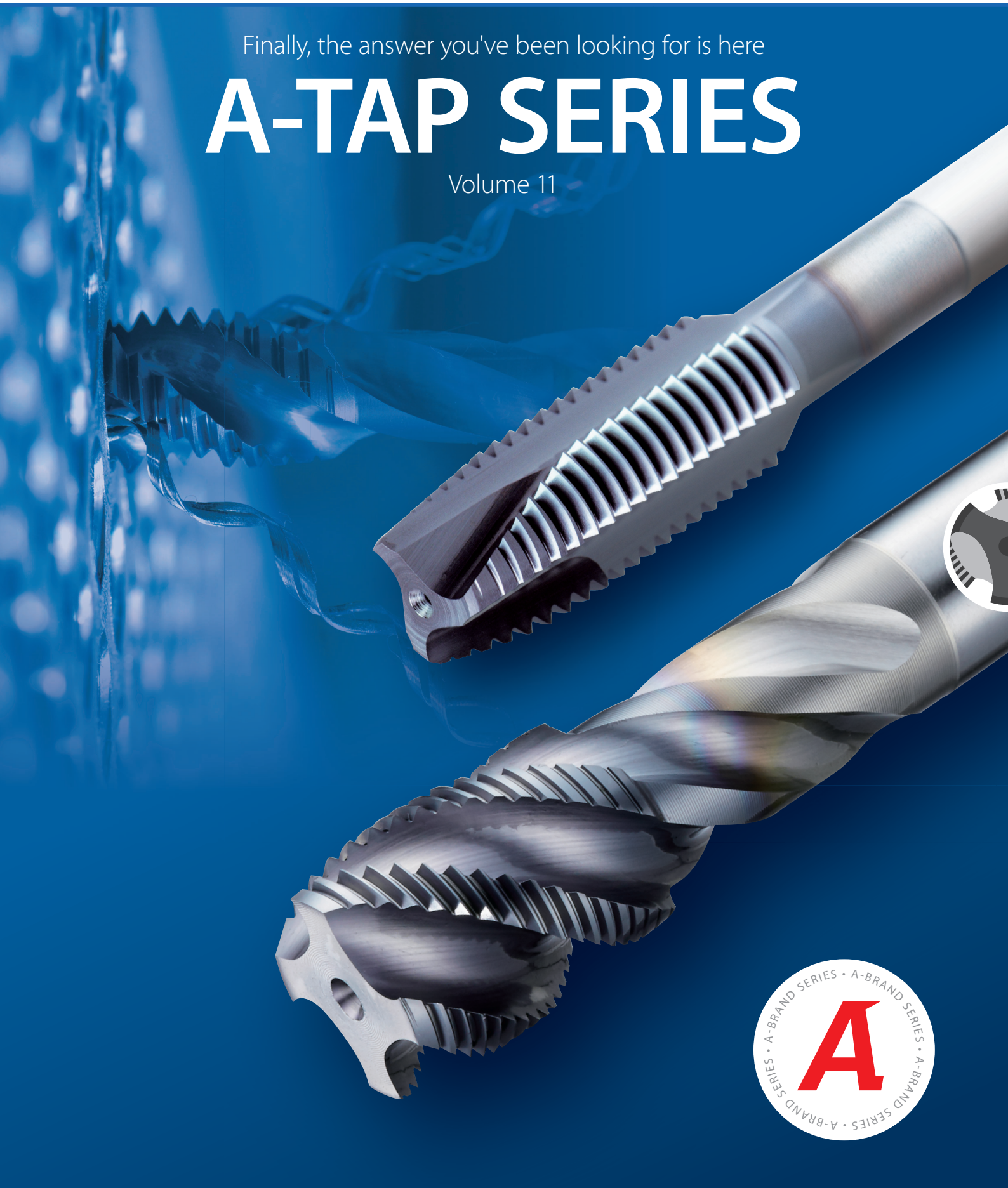

INDEX

Blind Hole

Metric

A-SFT ..... PAGE 8
A-OIL-SFT ..... PAGE 9
A-SFT-6GX ..... PAGE 10
A-SFT-7GX ..... PAGE 11
A-SFT FORM E **NEW SIZES** ..... PAGE 12
A-SFT + 0.1 ..... PAGE 13
A-LT-SFT ..... PAGE 14
A-SFT-LH ..... PAGE 15
A-SFT-HB Weldon Shank ..... PAGE 16

Metric Fine

A-SFT ..... PAGE 17
A-OIL-SFT ..... PAGE 18
A-SFT-6GX ..... PAGE 19
A-SFT FORM E **NEW** ..... PAGE 20

UNC

A-SFT ..... PAGE 21

UNF

A-SFT ..... PAGE 22

G (BSP)

A-SFT **NEW SIZE** ..... PAGE 23

Rp (BSPP)

A-SFT FORM E **NEW** ..... PAGE 24

BSW

A-SFT ..... PAGE 25

BSF

A-SFT ..... PAGE 26

BA

A-SFT ..... PAGE 27

Rc (BSPT)

A-TPT ..... PAGE 28

Rc (ISO)

A-SFT Rc ..... PAGE 29

NPT

A-SFT ..... PAGE 30

NPSF

A-SFT FORM E ..... PAGE 31

Through Hole

Metric

A-POT ..... PAGE 32
A-OIL-POT ..... PAGE 33
A-POT-6GX ..... PAGE 34
A-POT-7GX ..... PAGE 35
A-POT + 0.1 ..... PAGE 36
A-LT-POT ..... PAGE 37
A-POT-LH ..... PAGE 38
A-POT-HB Weldon Shank ..... PAGE 39

Metric Fine

A-POT ..... PAGE 40
A-OIL-POT ..... PAGE 41
A-POT-6GX ..... PAGE 42

UNC

A-POT ..... PAGE 43

UNF

A-POT ..... PAGE 44

G (BSP)

A-POT ..... PAGE 45

BSW

A-POT ..... PAGE 46

BSF

A-POT ..... PAGE 47

BA

A-POT ..... PAGE 48

Finally, the answer you've been looking for is here...

1. Stabilize chip shape
   Sharp cutting edge
2. Accelerate chip evacuation
   Variable lead flute (PAT.)
3. High wear resistance
   V coating
4. High wear resistance
   Powder Metallurgy HSS (CPM)

A-BRAND SERIES • A-BRAND SERIES • A-BRAND SERIES • A-BRAND SERIES

OSG'S NEW PREMIUM BRAND "A-TAP SERIES"

The answer for your troubles lies here
Most of tapping troubles are caused by unstable chip evacuation.
A-TAP Series resolve such troubles and apply to a wide range of work materials and cutting speed.

Tapping Troubles	
N°1 breakage and chipping	**26 %**
N°2 dimensional error	**17 %**
N°3 galling	**14 %**
Others	**43 %**

Main factor is chip packing

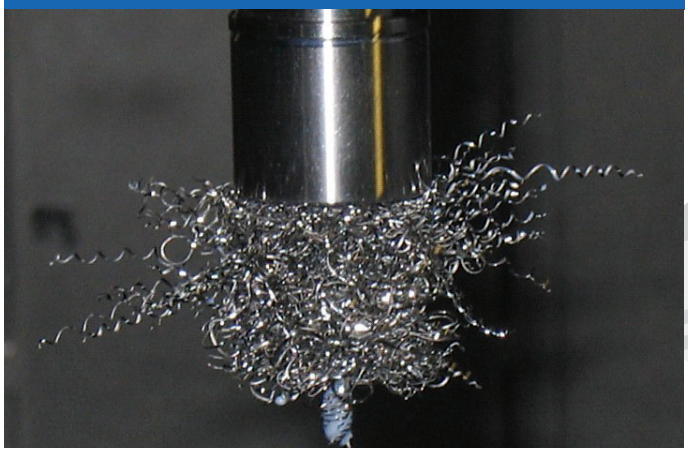

The biggest advantage of A-TAP Series:
THE BEST CHIP EVACUATION

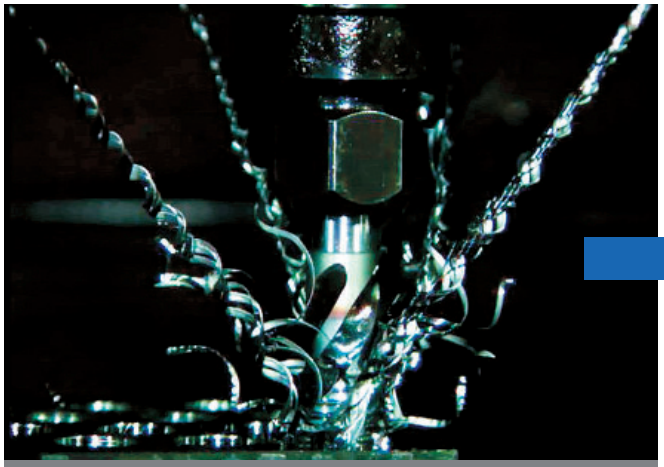

Conventional Tap

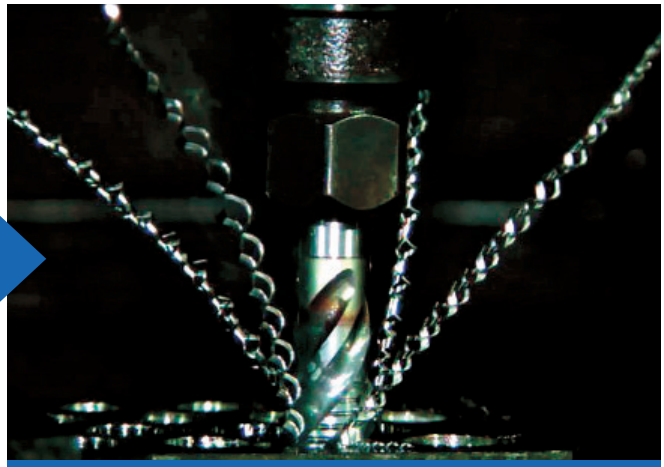

A-SFT

Applies to a wide variety of work materials

Even to mild steel and stainless steel

NO GALLING

Work material mild steel

Work material stainless steel

High performance in machining center

Applies to a wide cutting range

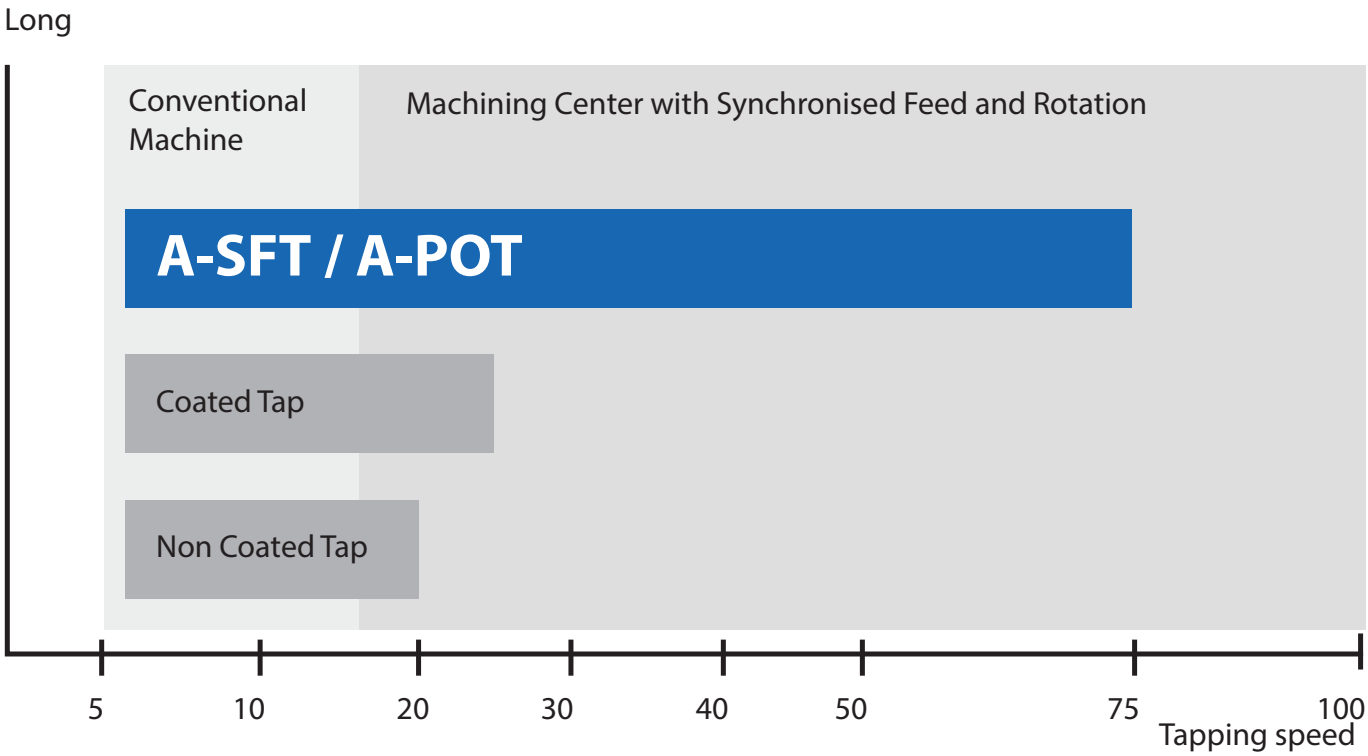

- It is a image of tapping in medium and high carbon steel with water soluble coolant.
- Machining center with synchronized feed and rotation is recommended for more than 15m/min.
- As the best speed varies by tapping condition, please find it by trials.

SUS304

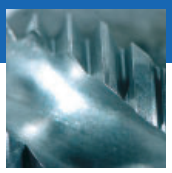

■ Cutting edge after 1.000 holes tapping

Deep Hole Tapping (2D) in stainless steel

High performance achieved in stainless steel with water soluble oil

Tool	A-SFT M8x1,25
Work Material	SUS304
Hole Size	Ø6,8x22mm (Blind)
Tapping Length	16mm (2D)
Tapping Speed	10m/min (398min^{-1})
Coolant	Water Soluble Chrorine-Free (10%)
Machine	Vertical Synchronized Machining Center

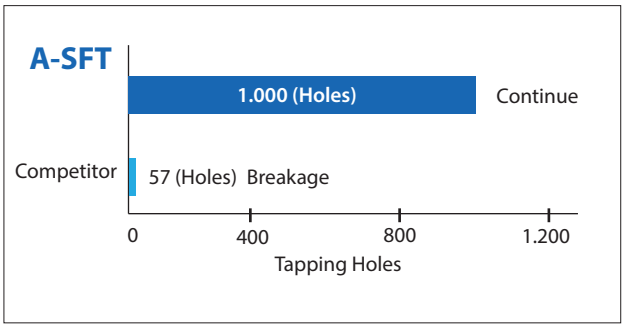

S45C

High speed tapping by machining center

Tapping operation in 15,30,40m/min are all stable

Tool	A-SFT M6x1
Work Material	S45C
Hole Size	Ø5x16mm (Blind)
Tapping Length	12mm (2D)
Coolant	Water Soluble Chrorine-Free (10%)
Machine	Vertical Synchronized Machining Center

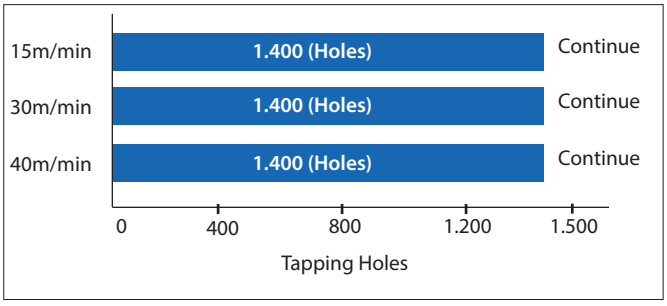

■ Cutting edge after 1.400 holes Tapping

15m/min

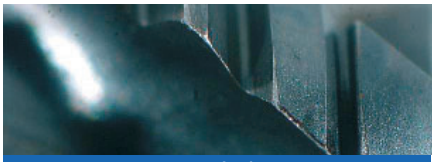

30m/min

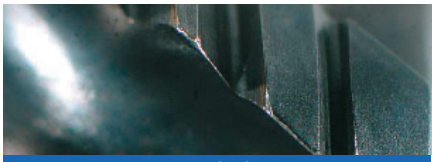

40m/min

■ Chip generated in 40m/min

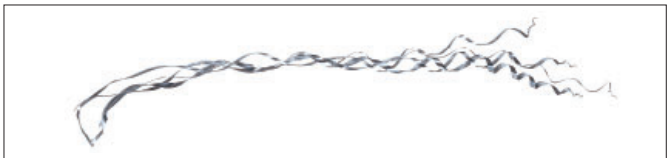

Conventional Tap

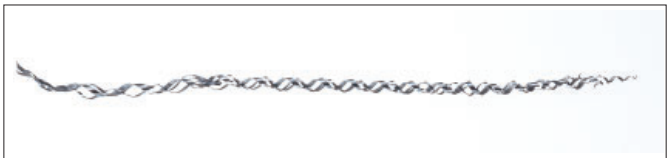

A-SFT

A-SFT

Threading | Cutting taps | Metric

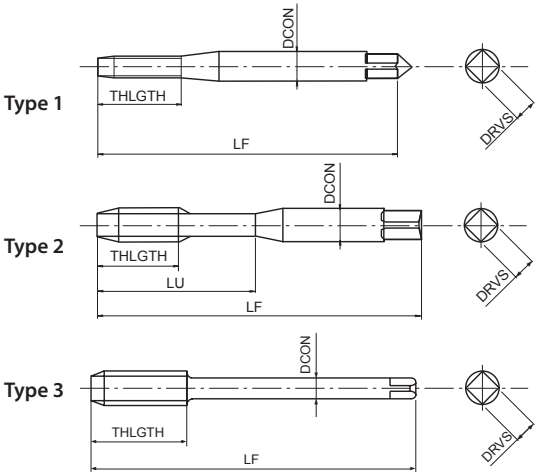

- First choice in quality and performance
- Powder metal spiral-fluted cutting tap for blind holes
- Multilayer TiCN coating
- High speed tapping in general steels, aluminium, stainless steels

P	P	P	P	M	N	N	S	H	
C <0,2%	0,25<C<0,4	C ≥ 0,45%	SCM	INOX	Al	AC, ADC	Ti	25-35 HRC	
15-60	15-60	10-60	8-30	8-20	15-35	15-35	5-10	8-20	m/min

A | M | PM | V | 45° | ISO 2 6HX | C/2,5 | DIN 371 | DIN 376

*Tolerance 5 HX

EDP	TD	TP	LF	THLGTH	LU	DCON	DRVS	NOF	Type	DIN
*48139111	1	0,25	40	-	5	2,5	2,1	2	1	371
*48139112	1,1	0,25	40	-	5	2,5	2,1	2	1	371
*48139113	1,2	0,25	40	-	5	2,5	2,1	2	1	371
*48139115	1,4	0,3	40	-	6	2,5	2,1	2	1	371
48139118	1,6	0,35	40	-	7	2,5	2,1	2	1	371
48139119	1,7	0,35	40	-	8	2,5	2,1	2	1	371
48139120	1,8	0,35	40	-	8	2,5	2,1	2	1	371
48139125	2	0,4	45	3,2	10	2,8	2,1	2	2	371
48139127	2,2	0,45	45	3,6	11	2,8	2,1	2	2	371
48139128	2,3	0,4	45	3,6	12	2,8	2,1	2	2	371
48139133	2,5	0,45	50	3,6	13	2,8	2,1	2	2	371
48139136	2,6	0,45	50	3,6	13	2,8	2,1	2	2	371
48139138	3	0,5	56	4	18	3,5	2,7	3	2	371
48139142	3,5	0,6	56	4,8	20	4	3	3	2	371
48139144	4	0,7	63	5,6	21	4,5	3,4	3	2	371
48139147	4,5	0,75	70	6	25	6	4,9	3	2	371
48139149	5	0,8	70	6,4	25	6	4,9	3	2	371
48139152	5,5	0,9	80	7,2	30	6	4,9	3	2	371
48139155	6	1	80	8	30	6	4,9	3	2	371
48139158	7	1	80	8	30	7	5,5	3	2	371
48139161	8	1,25	90	10	35	8	6,2	3	2	371
48139165	9	1,25	90	10	35	9	7	3	2	371
48139169	10	1,5	100	12	39	10	8	3	2	371
48139139	3	0,5	56	4	-	2,2	-	3	3	376
48139185	4	0,7	63	5,6	-	2,8	2,1	3	3	376
48139150	5	0,8	70	6,4	-	3,5	2,7	3	3	376
48139187	6	1	80	8	-	4,5	3,4	3	3	376
48139159	7	1	80	8	-	5,5	4,3	3	3	376
48139188	8	1,25	90	10	-	6	4,9	3	3	376
48139166	9	1,25	90	10	-	7	5,5	3	3	376
48139189	10	1,5	100	12	-	7	5,5	3	3	376
48139175	11	1,5	100	12	-	8	6,2	3	3	376
48139179	12	1,75	110	14	-	9	7	3	3	376
48139191	14	2	110	16	-	11	9	3	3	376
48139202	16	2	110	16	-	12	9	3	3	376
48139214	18	2,5	125	25	-	14	11	4	3	376
48139228	20	2,5	140	25	-	16	12	4	3	376
48139238	22	2,5	140	25	-	18	14,5	4	3	376
48139247	24	3	160	30	-	18	14,5	4	3	376

A-OIL-SFT

Threading | Cutting taps | Metric

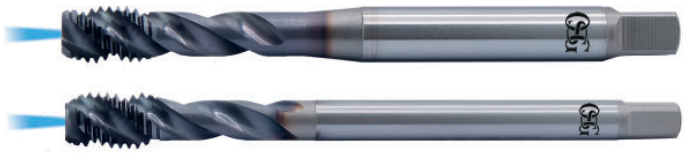

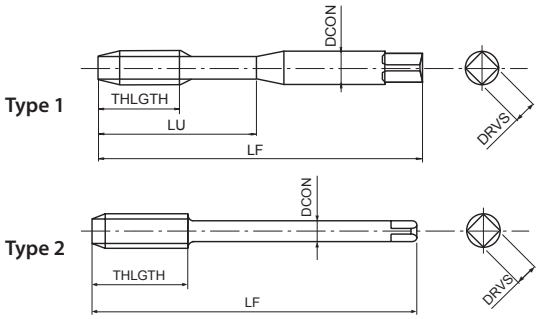

- First choice in quality and performance
- Powder metal spiral-fluted cutting tap for blind holes
- Multilayer TiCN coating
- High speed tapping in general steels, aluminium, stainless steels
- Centre through coolant

P ◉	P ◉	P ◉	P ◉	M ◉	N ○	N ○	S ○	H ○	
C <0,2%	0,25<C<0,4	C ≥ 0,45%	SCM	INOX	Al	AC, ADC	Ti	25-35 HRC	
15-60	15-60	10-60	8-30	8-20	15-35	15-35	5-10	8-20	m/min

A | M | PM | V | 45° | ISO 2 6HX | C/2,5 | DIN 371 | DIN 376

EDP	TD	TP	LF	THLGTH	LU	DCON	DRVS	NOF	Type	DIN
48140155	6	1	80	8	30	6	4,9	3	1	371
48140161	8	1,25	90	10	35	8	6,2	3	1	371
48140169	10	1,5	100	12	39	10	8	3	1	371
48140179	12	1,75	110	14	-	9	7	3	2	376
48140191	14	2	110	16	-	11	9	3	2	376
48140202	16	2	110	16	-	12	9	3	2	376
48140214	18	2,5	125	25	-	14	11	4	2	376
48140228	20	2,5	140	25	-	16	12	4	2	376
48140238	22	2,5	140	25	-	18	14,5	4	2	376
48140247	24	3	160	30	-	18	14,5	4	2	376
48140262	27	3	160	36	-	20	16	4	2	376
48140271	30	3,5	180	42	-	22	18	4	2	376
48140281	33	3,5	180	42	-	25	20	4	2	376
48140294	36	4	200	48	-	28	22	4	2	376
48140304	39	4	200	48	-	32	24	4	2	376
48140314	42	4,5	200	54	-	32	24	4	2	376
48140319	45	4,5	220	54	-	36	29	4	2	376
48140325	48	5	250	60	-	36	29	4	2	376
48140337	52	5	250	60	-	40	32	4	2	376
48140347	56	5,5	250	66	-	40	32	4	2	376

A-SFT 6GX NEW SIZE

Threading | Cutting taps | Metric

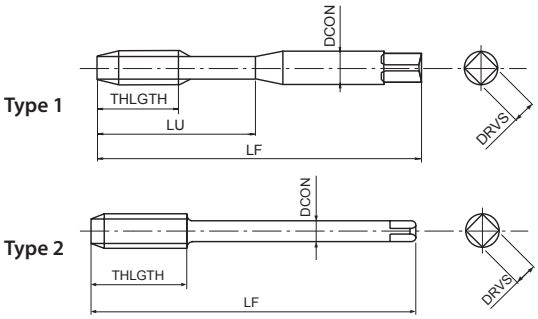

- First choice in quality and performance
- Powder metal spiral-fluted cutting tap for blind holes
- Multilayer TiCN coating
- High speed tapping in general steels, aluminium, stainless steels
- For 6G internal thread tolerance

P ◉	P ◉	P ◉	P ◉	M ◉	N ○	N ○	S ○	H ○	
C <0,2%	0,25<C<0,4	C ≥ 0,45%	SCM	INOX	Al	AC, ADC	Ti	25-35 HRC	
15-60	15-60	10-60	8-30	8-20	15-35	15-35	5-10	8-20	m/min

A | M | PM | V | 45° | ISO 3 6GX | C/2,5 | DIN 371 | DIN 376

EDP	TD	TP	Oversize	LF	THLGTH	LU	DCON	DRVS	NOF	Type	DIN
48201125	2	0,4	0,0190	45	3,2	10	2,8	2,1	2	1	371
48201133	2,5	0,45	0,0200	50	3,6	13	2,8	2,1	2	1	371
48201138	3	0,5	0,0200	56	4	18	3,5	2,7	3	1	371
48201144	4	0,7	0,0220	63	5,6	21	4,5	3,4	3	1	371
48201149	5	0,8	0,0240	70	6,4	25	6	4,9	3	1	371
48201155	6	1	0,0260	80	8	30	6	4,9	3	1	371
48201161	8	1,25	0,0280	90	10	35	8	6,2	3	1	371
48201169	10	1,5	0,0320	100	12	39	10	8	3	1	371
48201179	12	1,75	0,0340	110	14	-	9	7	3	2	376
48201191 NEW	14	2	0,0380	110	16	-	11	9	3	2	376
48201202	16	2	0,0380	110	16	-	12	9	3	2	376

A-SFT 7GX NEW SIZE

Threading | Cutting taps | Metric

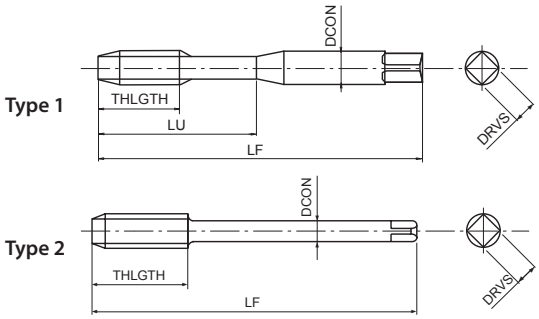

- First choice in quality and performance
- Powder metal spiral-fluted cutting tap for blind holes
- Multilayer TiCN coating
- High speed tapping in general steels, aluminium, stainless steels
- For 7G internal thread tolerance

P ◉	P ◉	P ◉	P ◉	M ◉	N ○	N ○	S ○	H ○	
C <0,2%	0,25<C<0,4	C ≥ 0,45%	SCM	INOX	Al	AC, ADC	Ti	25-35 HRC	
15-60	15-60	10-60	8-30	8-20	15-35	15-35	5-10	8-20	m/min

A	M	PM	V	45°	7GX	C/2,5		DIN 371	DIN 376

EDP	TD	TP	Oversize	LF	THLGTH	LU	DCON	DRVS	NOF	Type	DIN
48202125	2	0,4	0,0380	45	3,2	10	2,8	2,1	2	1	371
48202133	2,5	0,45	0,0400	50	3,6	13	2,8	2,1	2	1	371
48202138	3	0,5	0,0400	56	4	18	3,5	2,7	3	1	371
48202144	4	0,7	0,0440	63	5,6	21	4,5	3,4	3	1	371
48202149	5	0,8	0,0480	70	6,4	25	6	4,9	3	1	371
48202155	6	1	0,0520	80	8	30	6	4,9	3	1	371
48202161	8	1,25	0,0560	90	10	35	8	6,2	3	1	371
48202169	10	1,5	0,0640	100	12	39	10	8	3	1	371
48202179	12	1,75	0,0680	110	14	-	9	7	3	2	376
48202191 NEW	14	2	0,0760	110	16	-	11	9	3	2	376
48202202	16	2	0,0760	110	16	-	12	9	3	2	376

A-SFT FORM E NEW SIZES

Threading | Cutting taps | Metric

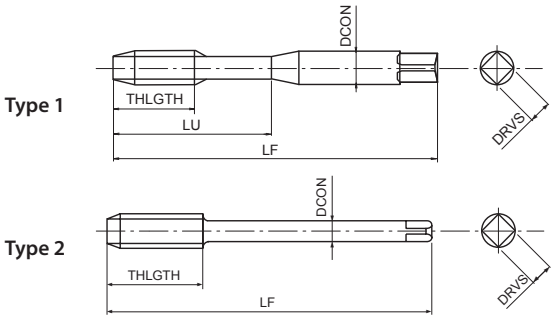

- First choice in quality and performance
- Powder metal spiral-fluted cutting tap for blind holes
- Multilayer TiCN coating
- High speed tapping in general steels, aluminium, stainless steels
- Chamfer Form E

P	P	P	P	M	N	N	S	H	
C <0,2%	0,25<C<0,4	C ≥ 0,45%	SCM	INOX	Al	AC, ADC	Ti	25-35 HRC	
15-60	15-60	10-60	8-30	8-20	15-35	15-35	5-10	8-20	m/min

A | M | PM | V | 45° | ISO 2 6HX | E/1,5 | DIN 371 | DIN 376

EDP	TD	TP	LF	THLGTH	LU	DCON	DRVS	NOF	Type	DIN
48203125 NEW	2	0,4	45	3,2	10	2,8	2,1	2	1	371
48203127 NEW	2,2	0,45	45	3,6	11	2,8	2,1	2	1	371
48203128 NEW	2,3	0,4	45	3,6	12	2,8	2,1	2	1	371
48203133 NEW	2,5	0,45	50	3,6	13	2,8	2,1	2	1	371
48203136 NEW	2,6	0,45	50	3,6	13	2,8	2,1	2	1	371
48203138	3	0,5	56	4	18	3,5	2,7	3	1	371
48203142 NEW	3,5	0,6	56	4,8	20	4	3	3	1	371
48203144	4	0,7	63	5,6	21	4,5	3,4	3	1	371
48203147 NEW	4,5	0,75	70	6	25	6	4,9	3	1	371
48203149	5	0,8	70	6,4	25	6	4,9	3	1	371
48203152 NEW	5,5	0,9	80	7,2	30	6	4,9	3	1	371
48203155	6	1	80	8	30	6	4,9	3	1	371
48203158 NEW	7	1	80	8	30	7	5,5	3	1	371
48203161	8	1,25	90	10	35	8	6,2	3	1	371
48203165 NEW	9	1,25	90	10	35	9	7	3	1	371
48203169	10	1,5	100	12	39	10	8	3	1	371
48203139 NEW	3	0,5	56	4	-	2,2		3	2	376
48203185 NEW	4	0,7	63	5,6	-	2,8	2,1	3	2	376
48203150 NEW	5	0,8	70	6,4	-	3,5	2,7	3	2	376
48203187 NEW	6	1	80	5	-	4,5	3,4	3	2	376
48203159 NEW	7	1	80	8	-	5,5	4,3	3	2	376
48203188 NEW	8	1,25	90	10	-	6	4,9	3	2	376
48203166 NEW	9	1,25	90	10	-	7	5,5	3	2	376
48203189 NEW	10	1,5	100	12	-	7	5,5	3	2	376
48203175 NEW	11	1,5	100	12	-	8	6,2	3	2	376
48203179	12	1,75	110	14	-	9	7	3	2	376
48203191	14	2	110	16	-	11	9	3	2	376
48203202	16	2	110	16	-	12	9	3	2	376
48203214 NEW	18	2,5	125	25	-	14	11	4	2	376
48203228 NEW	20	2,5	140	25	-	16	12	4	2	376
48203238 NEW	22	2,5	140	25	-	18	14,5	4	2	376
48203247 NEW	24	3	160	30	-	18	14,5	4	2	376

A-SFT +0.1

Threading | Cutting taps | Metric

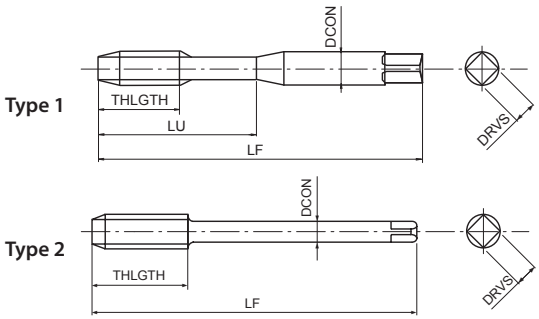

- First choice in quality and performance
- Powder metal spiral-fluted cutting tap for blind holes
- Multilayer TiCN coating
- High speed tapping in general steels, aluminium, stainless steels
- Oversized tap for 6H +0,1mm thread tolerance

P ◉	P ◉	P ◉	P ◉	M ◉	N ○	N ○	S ○	H ○	
C <0,2%	0,25<C<0,4	C ≥ 0,45%	SCM	INOX	Al	AC, ADC	Ti	25-35 HRC	
15-60	15-60	10-60	8-30	8-20	15-35	15-35	5-10	8-20	m/min

A	M	PM	V	45°	6H +0.1	C/2,5		DIN 371	DIN 376

EDP	TD	TP	LF	THLGTH	LU	DCON	DRVS	NOF	Type	DIN
48204138	3	0,5	56	4	18	3,5	2,7	3	1	371
48204144	4	0,7	63	5,6	21	4,5	3,4	3	1	371
48204149	5	0,8	70	6,4	25	6	4,9	3	1	371
48204155	6	1	80	8	30	6	4,9	3	1	371
48204161	8	1,25	90	10	35	8	6,2	3	1	371
48204169	10	1,5	100	12	39	10	8	3	1	371
48204179	12	1,75	110	14	-	9	7	3	2	376
48204202	16	2	110	16	-	12	9	3	2	376

A-LT-SFT

Threading | Cutting taps | Metric

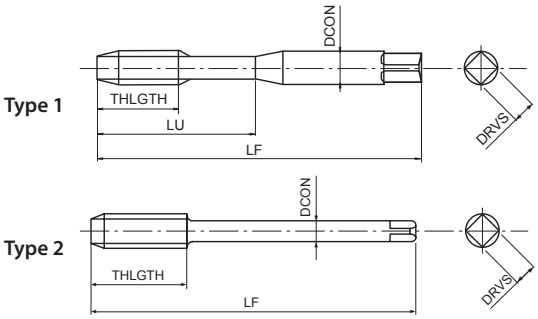

- First choice in quality and performance
- Powder metal spiral-fluted cutting tap for blind holes
- Multilayer TiCN coating
- High speed tapping in general steels, aluminium, stainless steels
- With long shank for long reach threading

P ◉	P ◉	P ◉	P ◉	M ◉	N ○	N ○	S ○	H ○	
C <0,2%	0,25<C<0,4	C ≥ 0,45%	SCM	INOX	Al	AC, ADC	Ti	25-35 HRC	
15-60	15-60	10-60	8-30	8-20	15-35	15-35	5-10	8-20	m/min

A | M | PM | V | 45° | ISO 2 6HX | C/2,5

EDP	TD	TP	LF	THLGTH	LU	DCON	DRVS	NOF	Type
48208125	2	0,4	80	3,2	10	2,8	2,1	2	1
48208133	2,5	0,45	100	3,6	13	2,8	2,1	2	1
48208138	3	0,5	100	4	18	3,5	2,7	3	1
48208144	4	0,7	125	5,6	21	4,5	3,4	3	1
48208149	5	0,8	160	6,4	25	6	4,9	3	1
48208155	6	1	160	8	30	6	4,9	3	1
48209155	6	1	160	10	-	4,5	3,4	3	2
48208161	8	1,25	180	10	35	8	6,2	3	1
48209161	8	1,25	180	11	-	6	4,9	3	2
48208169	10	1,5	200	12	39	10	8	3	1
48209169	10	1,5	200	14	-	7	5,5	3	2
48209179	12	1,75	200	14	-	9	7	3	2
48209191	14	2	200	16	-	11	9	3	2
48209202	16	2	200	16	-	12	9	3	2
48209214	18	2,5	200	25	-	14	11	4	2
48209228	20	2,5	200	25	-	16	12	4	2

A-SFT-LH

Threading | Cutting taps | Metric

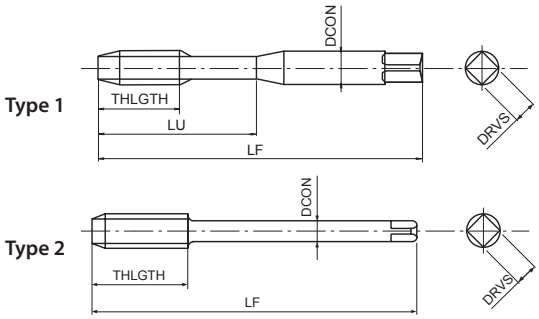

- First choice in quality and performance
- Powder metal spiral-fluted cutting tap for blind holes
- Multilayer TiCN coating
- High speed tapping in general steels, aluminium, stainless steels
- For left-hand threads

P ◉	P ◉	P ◉	P ◉	M ◉	N ○	N ○	S ○	H ○	
C <0,2%	0,25<C<0,4	C ≥ 0,45%	SCM	INOX	Al	AC, ADC	Ti	25-35 HRC	
15-60	15-60	10-60	8-30	8-20	15-35	15-35	5-10	8-20	m/min

A | M | PM | V | 45° | ISO 2 6HX | C/2,5 | DIN 371 | DIN 376 | LH

EDP	TD	TP	LF	THLGTH	LU	DCON	DRVS	NOF	Type	DIN
48217138	3	0,5	56	4	18	3,5	2,7	3	1	371
48217144	4	0,7	63	5,6	21	4,5	3,4	3	1	371
48217149	5	0,8	70	6,4	25	6	4,9	3	1	371
48217155	6	1	80	8	30	6	4,9	3	1	371
48217161	8	1,25	90	10	35	8	6,2	3	1	371
48217169	10	1,5	100	12	39	10	8	3	1	371
48217179	12	1,75	110	14	-	9	7	3	2	376
48217191	14	2	110	16	-	11	9	3	2	376
48217202	16	2	110	16	-	12	9	3	2	376
48217214	18	2,5	125	25	-	14	11	4	2	376
48217228	20	2,5	140	25	-	16	12	4	2	376
48217238	22	2,5	140	25	-	18	14,5	4	2	376
48217247	24	3	160	30	-	18	14,5	4	2	376

A-SFT-HB Weldon

Threading | Cutting taps | Metric

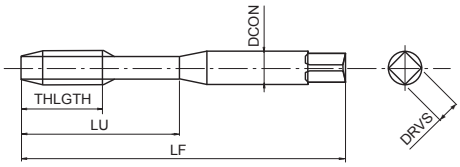

- First choice in quality and performance
- Powder metal spiral-fluted cutting tap for blind holes
- Multilayer TiCN coating
- High speed tapping in general steels, aluminium, stainless steels
- With Weldon shank

P	P	P	P	M	N	N	S	H	
C <0,2%	0,25<C<0,4	C ≥ 0,45%	SCM	INOX	Al	AC, ADC	Ti	25-35 HRC	
15-60	15-60	10-60	8-30	8-20	15-35	15-35	5-10	8-20	m/min

A | M | PM | V | 45° | ISO 2 6HX | C/2,5 | DIN 371 | DIN 1835 | HB

EDP	TD	TP	LF	THLGTH	LU	DCON	DRVS	NOF	DIN
48220138	3	0,5	56	4	18	6	4,9	3	371/1835
48220144	4	0,7	63	5,6	21	6	4,9	3	371/1835
48220149	5	0,8	70	6,4	25	6	4,9	3	371/1835
48220155	6	1	80	8	30	6	4,9	3	371/1835
48220161	8	1,25	90	10	35	8	6,2	3	371/1835
48220169	10	1,5	100	12	39	10	8	3	371/1835
48220179	12	1,75	110	14	46	12	9	3	371/1835
48220191	14	2	110	16	49	14	11	3	371/1835
48220202	16	2	110	16	56	16	12	3	371/1835

A-SFT

Threading | Cutting taps | Metric Fine

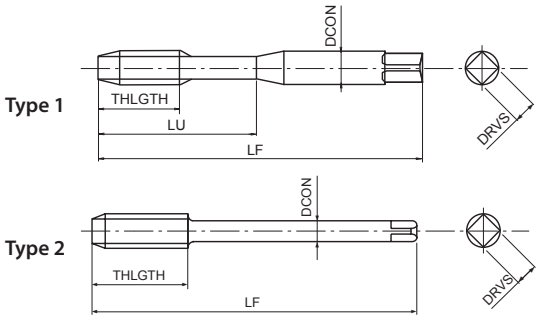

- First choice in quality and performance
- Powder metal spiral-fluted cutting tap for blind holes
- Multilayer TiCN coating
- High speed tapping in general steels, aluminium, stainless steels

P ◉	P ◉	P ◉	P ◉	M ◉	N ○	N ○	S ○	H ○	
C <0,2%	0,25<C<0,4	C ≥ 0,45%	SCM	INOX	Al	AC, ADC	Ti	25-35 HRC	
15-60	15-60	10-60	8-30	8-20	15-35	15-35	5-10	8-20	m/min

A | MF | PM | V | 45° | ISO 2 6HX | C/2,5 | DIN 371 | DIN 374

EDP	TD	TP	LF	THLGTH	LU	DCON	DRVS	NOF	Type	DIN
48139135	2,5	0,35	50	3,6	13	2,8	2,1	2	1	371
48139137	2,6	0,35	50	3,6	13	2,8	2,1	2	1	371
48139141	3	0,35	56	4	18	3,5	2,7	3	1	371
48139143	3,5	0,35	56	4,8	20	4	3	3	1	371
48139146	4	0,35	63	5,6	21	4,5	3,4	3	1	371
48139145	4	0,5	63	5,6	21	4,5	3,4	3	1	371
48139148	4,5	0,5	70	6	25	6	4,9	3	1	371
48139151	5	0,5	70	6,4	25	6	4,9	3	1	371
48139602	6	0,5	80	8	30	6	4,9	3	1	371
48139601	6	0,75	80	8	30	6	4,9	3	1	371
48139160	7	0,75	80	8	30	7	5,5	3	1	371
48139604	8	0,75	80	10	35	8	6,2	3	1	371
48139603	8	1	90	10	35	8	6,2	3	1	371
48139605	9	1	90	10	35	9	7	3	1	371
48139608	10	0,75	90	12	35	10	8	3	1	371
48139607	10	1	90	12	35	10	8	3	1	371
48139606	10	1,25	100	12	39	10	8	3	1	371
48139157	6	0,5	80	8	-	4,5	3,4	3	2	374
48139156	6	0,75	80	8	-	4,5	3,4	3	2	374
48139163	8	0,75	80	8	-	6	4,9	3	2	374
48139162	8	1	90	10	-	6	4,9	3	2	374
48139167	9	1	90	10	-	7	5,5	3	2	374
48139172	10	0,75	90	10	-	7	5,5	3	2	374
48139171	10	1	90	10	-	7	5,5	3	2	374
48139170	10	1,25	100	12	-	7	5,5	3	2	374
48139176	11	1	90	12	-	8	6,2	3	2	374
48139182	12	1	100	12	-	9	7	3	2	374
48139181	12	1,25	100	12	-	9	7	3	2	374
48139180	12	1,5	100	14	-	9	7	3	2	374
48139194	14	1	100	16	-	11	9	3	2	374
48139193	14	1,25	100	16	-	11	9	3	2	374
48139192	14	1,5	100	16	-	11	9	3	2	374
48139204	16	1	100	16	-	12	9	3	2	374
48139203	16	1,5	100	16	-	12	9	3	2	374
48139218	18	1	110	16	-	14	11	4	2	374
48139216	18	1,5	110	16	-	14	11	4	2	374
48139232	20	1	125	16	-	16	12	4	2	374
48139230	20	1,5	125	16	-	16	12	4	2	374
48139220	20	2	140	25	-	16	12	4	2	374
48139241	22	1	125	16	-	18	14,5	4	2	374
48139240	22	1,5	125	16	-	18	14,5	4	2	374
48139239	22	2	140	25	-	18	14,5	4	2	374
48139251	24	1	140	16	-	18	14,5	4	2	374
48139250	24	1,5	140	16	-	18	14,5	4	2	374
48139249	24	2	140	30	-	18	14,5	4	2	374

A-OIL-SFT

Threading | Cutting taps | Metric Fine

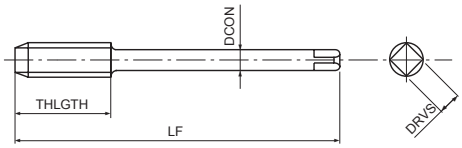

- First choice in quality and performance
- Powder metal spiral-fluted cutting tap for blind holes
- Multilayer TiCN coating
- High speed tapping in general steels, aluminium, stainless steels
- Centre through coolant

P ◉	P ◉	P ◉	P ◉	M ◉	N ○	N ○	S ○	H ○	
C <0,2%	0,25<C<0,4	C ≥ 0,45%	SCM	INOX	Al	AC, ADC	Ti	25-35 HRC	
15-60	15-60	10-60	8-30	8-20	15-35	15-35	5-10	8-20	m/min

A | MF | PM | V | 45° | ISO 2 6HX | C/2,5 | DIN 374

EDP	TD	TP	LF	THLGTH	DCON	DRVS	NOF	DIN
48140162	8	1	90	10	6	4,9	3	374
48140171	10	1	90	10	7	5,5	3	374
48140170	10	1,25	100	12	7	5,5	3	374
48140180	12	1,5	100	14	9	7	3	374
48140192	14	1,5	100	16	11	9	3	374
48140203	16	1,5	100	16	12	9	3	374
48140216	18	1,5	110	16	14	11	4	374
48140230	20	1,5	125	16	16	12	4	374

A-SFT 6GX

Threading | Cutting taps | Metric Fine

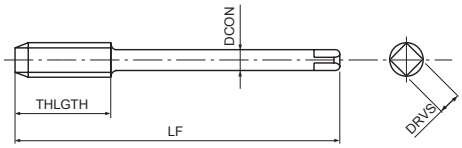

- First choice in quality and performance
- Powder metal spiral-fluted cutting tap for blind holes
- Multilayer TiCN coating
- High speed tapping in general steels, aluminium, stainless steels
- For 6G internal thread tolerance

P ◉	P ◉	P ◉	P ◉	M ◉	N ○	N ○	S ○	H ○	
C <0,2%	0,25<C<0,4	C ≥ 0,45%	SCM	INOX	Al	AC, ADC	Ti	25-35 HRC	
15-60	15-60	10-60	8-30	8-20	15-35	15-35	5-10	8-20	m/min

A | MF | PM | V | 45° | ISO 3 6GX | C/2,5 | DIN 374

EDP	TD	TP	Oversize	LF	THLGTH	DCON	DRVS	NOF	DIN
48201156	6	0,75	0,0220	80	8	4,5	3,4	3	374
48201163	8	0,75	0,0220	80	8	6	4,9	3	374
48201162	8	1	0,0260	90	10	6	4,9	3	374
48201171	10	1	0,0260	90	10	7	5,5	3	374
48201170	10	1,25	0,0280	100	12	7	5,5	3	374
48201182	12	1	0,0260	100	12	9	7	3	374
48201181	12	1,25	0,0280	100	12	9	7	3	374
48201180	12	1,5	0,0320	100	14	9	7	3	374
48201192	14	1,5	0,0320	100	16	11	9	3	374
48201203	16	1,5	0,0320	100	16	12	9	3	374
48201216	18	1,5	0,0320	110	16	14	11	4	374
48201230	20	1,5	0,0320	125	16	16	12	4	374
48201240	22	1,5	0,0320	125	16	18	14,5	4	374
48201250	24	1,5	0,0320	140	16	18	14,5	4	374

A-SFT FORM E NEW

Threading | Cutting taps | Metric Fine

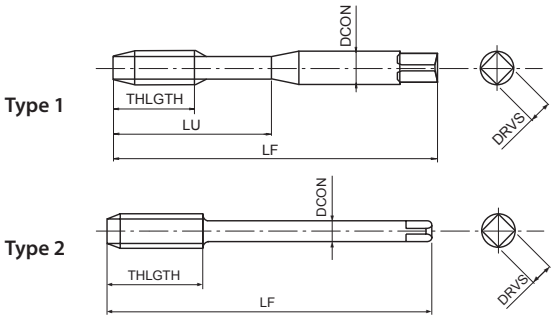

- First choice in quality and performance
- Powder metal spiral-fluted cutting tap for blind holes
- Multilayer TiCN coating
- High speed tapping in general steels, aluminium, stainless steels
- Chamfer Form E

P	P	P	P	M	N	N	S	H	
C <0,2%	0,25<C<0,4	C ≥ 0,45%	SCM	INOX	Al	AC, ADC	Ti	25-35 HRC	
15-60	15-60	10-60	8-30	8-20	15-35	15-35	5-10	8-20	m/min

A | MF | PM | V | 45° | ISO 2 6HX | E/1,5 | DIN 371 | DIN 374

EDP	TD	TP	LF	THLGTH	LU	DCON	DRVS	NOF	Type	DIN
48203135	2,5	0,35	50	3,6	13	2,8	2,1	2	1	371
48203137	2,6	0,35	50	3,6	13	2,8	2,1	2	1	371
48203141	3	0,35	56	4	18	3,5	2,7	3	1	371
48203143	3,5	0,35	56	4,8	20	4	3	3	1	371
48203146	4	0,35	63	5,6	21	4,5	3,4	3	1	371
48203145	4	0,5	63	5,6	21	4,5	3,4	3	1	371
48203148	4,5	0,5	70	6	25	6	4,9	3	1	371
48203151	5	0,5	70	6,4	25	6	4,9	3	1	371
48203602	6	0,5	80	8	30	6	4,9	3	1	371
48203601	6	0,75	80	8	30	6	4,9	3	1	371
48203160	7	0,75	80	8	30	7	5,5	3	1	371
48203604	8	0,75	80	10	35	8	6,2	3	1	371
48203603	8	1	90	10	35	8	6,2	3	1	371
48203605	9	1	90	10	35	9	7	3	1	371
48203608	10	0,75	90	12	35	10	8	3	1	371
48203607	10	1	90	12	35	10	8	3	1	371
48203606	10	1,25	100	12	39	10	8	3	1	371
48203157	6	0,5	80	8	-	4,5	3,4	3	2	374
48203156	6	0,75	80	8	-	4,5	3,4	3	2	374
48203163	8	0,75	80	8	-	6	4,9	3	2	374
48203162	8	1	90	10	-	6	4,9	3	2	374
48203167	9	1	90	10	-	7	5,5	3	2	374
48203172	10	0,75	90	10	-	7	5,5	3	2	374
48203171	10	1	90	10	-	7	5,5	3	2	374
48203170	10	1,25	100	12	-	7	5,5	3	2	374
48203176	11	1	90	12	-	8	6,2	3	2	374
48203182	12	1	100	12	-	9	7	3	2	374
48203181	12	1,25	100	12	-	9	7	3	2	374
48203180	12	1,5	100	14	-	9	7	3	2	374
48203194	14	1	100	16	-	11	9	3	2	374
48203193	14	1,25	100	16	-	11	9	3	2	374
48203192	14	1,5	100	16	-	11	9	3	2	374
48203204	16	1	100	16	-	12	9	3	2	374
48203203	16	1,5	100	16	-	12	9	3	2	374
48203218	18	1	110	16	-	14	11	4	2	374
48203216	18	1,5	110	16	-	14	11	4	2	374
48203232	20	1	125	16	-	16	12	4	2	374
48203230	20	1,5	125	16	-	16	12	4	2	374
48203220	20	2	140	25	-	16	12	4	2	374
48203241	22	1	125	16	-	18	14,5	4	2	374
48203240	22	1,5	125	16	-	18	14,5	4	2	374
48203239	22	2	140	25	-	18	14,5	4	2	374
48203251	24	1	140	16	-	18	14,5	4	2	374
48203250	24	1,5	140	16	-	18	14,5	4	2	374
48203249	24	2	140	30	-	18	14,5	4	2	374

A-SFT

Threading | Cutting taps | UNC

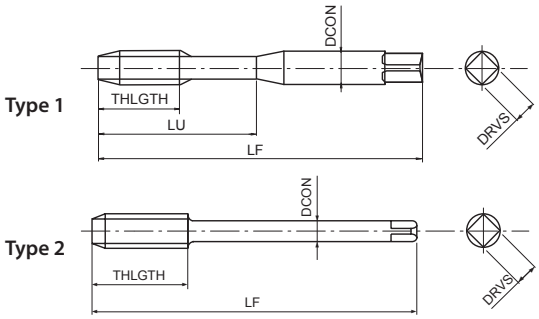

- First choice in quality and performance
- Powder metal spiral-fluted cutting tap for blind holes
- Multilayer TiCN coating
- High speed tapping in general steels, aluminium, stainless steels

P ◉	P ◉	P ◉	P ◉	M ◉	N ○	N ○	S ○	H ○	
C <0,2%	0,25<C<0,4	C ≥ 0,45%	SCM	INOX	Al	AC, ADC	Ti	25-35 HRC	
15-60	15-60	10-60	8-30	8-20	15-35	15-35	5-10	8-20	m/min

A	UNC	PM	V	45°	ANSI 2BX	C/2,5		DIN 2184-1	DIN 2184-1

EDP	TD	TP	LF	THLGTH	LU	DCON	DRVS	NOF	Type	DIN
48139453	2	56	45	3,6	11	2,8	2,1	2	1	2184-1
48139455	3	48	50	3,6	13	2,8	2,1	2	1	2184-1
48139457	4	40	56	5,1	18	3,5	2,7	2	1	2184-1
48139459	5	40	56	5,1	18	3,5	2,7	2	1	2184-1
48139461	6	32	56	6,4	20	4	3	2	1	2184-1
48139464	8	32	63	6,4	21	4,5	3,4	2	1	2184-1
48139466	10	24	70	8,5	25	6	4,9	2	1	2184-1
48139468	12	24	80	8,5	30	6	4,9	2	1	2184-1
48139471	1/4	20	80	10,2	30	7	5,5	2	1	2184-1
48139474	5/16	18	90	11,3	35	8	6,2	3	1	2184-1
48139479	3/8	16	100	12,7	39	10	8	3	1	2184-1
48139484	7/16	14	100	14,5	-	8	6,2	3	2	2184-1
48139489	1/2	13	110	15,6	-	9	7	3	2	2184-1
48139494	9/16	12	110	16,9	-	11	9	3	2	2184-1
48139501	5/8	11	110	18,5	-	12	9	3	2	2184-1
48139515	3/4	10	125	25,4	-	14	11	4	2	2184-1
48139526	7/8	9	140	28,2	-	18	14,5	4	2	2184-1
48139538	1	8	160	31,8	-	18	14,5	4	2	2184-1

A-SFT

Threading | Cutting taps | UNF

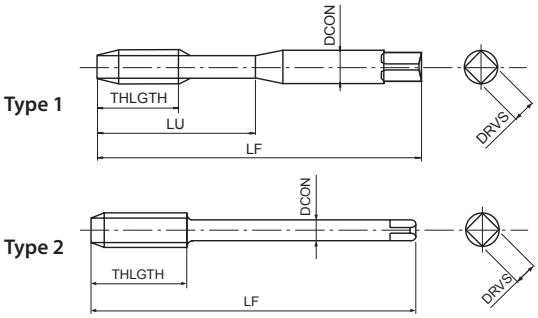

- First choice in quality and performance
- Powder metal spiral-fluted cutting tap for blind holes
- Multilayer TiCN coating
- High speed tapping in general steels, aluminium, stainless steels

P ◉	P ◉	P ◉	P ◉	M ◉	N ○	N ○	S ○	H ○	
C <0,2%	0,25<C<0,4	C ≥ 0,45%	SCM	INOX	Al	AC, ADC	Ti	25-35 HRC	
15-60	15-60	10-60	8-30	8-20	15-35	15-35	5-10	8-20	m/min

A	UNF	PM	V	45°	ANSI 2BX	C/2,5		DIN 2184-1	DIN 2184-1

EDP	TD	TP	LF	THLGTH	LU	DCON	DRVS	NOF	Type	DIN
48139454	2	64	45	3,6	11	2,8	2,1	2	1	2184-1
48139456	3	56	50	3,6	13	2,8	2,1	2	1	2184-1
48139458	4	48	56	5,1	18	3,5	2,7	2	1	2184-1
48139460	5	44	56	5,1	18	3,5	2,7	2	1	2184-1
48139462	6	40	56	6,4	20	4	3	2	1	2184-1
48139465	8	36	63	6,4	21	4,5	3,4	2	1	2184-1
48139467	10	32	70	8,5	25	6	4,9	2	1	2184-1
48139469	12	28	80	8,5	30	6	4,9	2	1	2184-1
48139472	1/4	28	80	10,2	30	7	5,5	2	1	2184-1
48139476	5/16	24	90	11,3	35	8	6,2	3	1	2184-1
48139481	3/8	24	90	12,7	35	10	8	3	1	2184-1
48139486	7/16	20	100	14,5	-	8	6,2	3	2	2184-1
48139491	1/2	20	100	15,6	-	9	7	3	2	2184-1
48139496	9/16	18	100	16,9	-	11	9	3	2	2184-1
48139504	5/8	18	100	18,5	-	12	9	3	2	2184-1
48139517	3/4	16	110	25,4	-	14	11	4	2	2184-1
48139528	7/8	14	125	28,2	-	18	14,5	4	2	2184-1
48139539	1	12	140	31,8	-	18	14,5	4	2	2184-1

A-SFT NEW SIZE

Threading | Cutting taps | G (BSP)

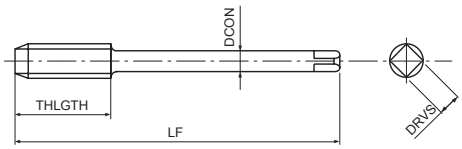

- First choice in quality and performance
- Powder metal spiral-fluted cutting tap for blind holes
- Multilayer TiCN coating
- High speed tapping in general steels, aluminium, stainless steels

P ◉	P ◉	P ◉	P ◉	M ◉	N ○	N ○	S ○	H ○	
C <0,2%	0,25<C<0,4	C ≥ 0,45%	SCM	INOX	Al	AC, ADC	Ti	25-35 HRC	
15-60	15-60	10-60	8-30	8-20	15-35	15-35	5-10	8-20	m/min

A | G | PM | V | 45° | C/2,5 | DIN 5156

EDP	TD	TP	LF	THLGTH	DCON	DRVS	NOF	DIN
48139700 NEW	1/16	28	90	22	6	4,9	3	5156
48139900	1/8	28	90	20	7	5,5	3	5156
48139000	1/4	19	100	22	11	9	3	5156
48139100	3/8	19	100	22	12	9	4	5156
48139200	1/2	14	125	25	16	12	4	5156
48139300	5/8	14	125	25	18	14,5	4	5156
48139400	3/4	14	140	28	20	16	4	5156
48139500	7/8	14	150	28	22	18	4	5156
48139600	1	11	160	30	25	20	4	5156

A-SFT FORM E NEW

Threading | Cutting taps | Rp (BSPP)

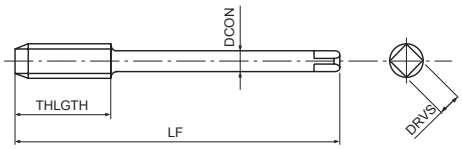

- First choice in quality and performance
- Powder metal spiral-fluted cutting tap for blind holes
- Multilayer TiCN coating
- High speed tapping in general steels, aluminium, stainless steels
- Chamfer Form E

P	P	P	P	M	N	N	S	H	
C <0,2%	0,25<C<0,4	C ≥ 0,45%	SCM	INOX	Al	AC, ADC	Ti	25-35 HRC	
15-60	15-60	10-60	8-30	8-20	15-35	15-35	5-10	8-20	m/min

A | Rp | PM | V | 45° | E/1,5 | DIN 5156

EDP	TD	TP	LF	THLGTH	DCON	DRVS	NOF	DIN
48203799	1/16	28	90	22	6	4,9	3	5156
48203999	1/8	28	90	20	7	5,5	3	5156
48203099	1/4	19	100	22	11	9	3	5156
48203199	3/8	19	100	22	12	9	4	5156
48203299	1/2	14	125	25	16	12	4	5156
48203499	3/4	14	140	28	20	16	4	5156
48203699	1	11	160	30	25	20	4	5156

A-SFT

Threading | Cutting taps | BSW

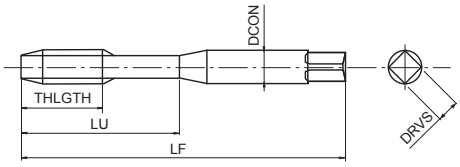

- First choice in quality and performance
- Powder metal spiral-fluted cutting tap for blind holes
- Multilayer TiCN coating
- High speed tapping in general steels, aluminium, stainless steels

P	P	P	P	M	N	N	S	H	
C <0,2%	0,25<C<0,4	C ≥ 0,45%	SCM	INOX	Al	AC, ADC	Ti	25-35 HRC	
15-60	15-60	10-60	8-30	8-20	15-35	15-35	5-10	8-20	m/min

A | BSW | PM | V | 45° | MED | C/2,5 | DIN 2184-1

EDP	TD	TP	LF	THLGTH	LU	DCON	DRVS	NOF	DIN
48139702	1/8	40	56	7	18	3,5	2,7	2	2184-1
48139704	3/16	24	70	10	25	6	4,9	2	2184-1
48139706	1/4	20	80	13	30	7	5,5	2	2184-1
48139707	5/16	18	90	14	35	8	6,2	3	2184-1
48139708	3/8	16	100	16	39	10	8	3	2184-1
48139709	7/16	14	100	22	-	8	6,2	3	2184-1
48139710	1/2	12	110	25	-	9	7	3	2184-1
48139712	5/8	11	110	27	-	12	9	3	2184-1
48139713	3/4	10	125	30	-	14	11	4	2184-1
48139714	7/8	9	140	32	-	18	14,5	4	2184-1
48139715	1	8	160	36	-	18	14,5	4	2184-1

A-SFT

Threading | Cutting taps | BSF

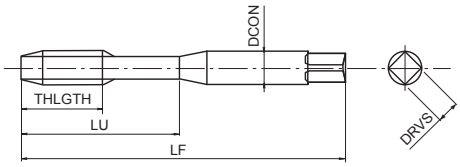

- First choice in quality and performance
- Powder metal spiral-fluted cutting tap for blind holes
- Multilayer TiCN coating
- High speed tapping in general steels, aluminium, stainless steels

P	P	P	P	M	N	N	S	H	
C <0,2%	0,25<C<0,4	C ≥ 0,45%	SCM	INOX	Al	AC, ADC	Ti	25-35 HRC	
15-60	15-60	10-60	8-30	8-20	15-35	15-35	5-10	8-20	m/min

A | BSF | PM | V | 45° | MED | C/2,5 | DIN 2184-1

EDP	TD	TP	LF	THLGTH	LU	DCON	DRVS	NOF	DIN
48139731	1/4	26	80	17	30	7	5,5	3	2184-1
48139732	5/16	22	90	17	35	8	6,2	3	2184-1
48139733	3/8	20	100	18	39	10	8	3	2184-1
48139734	7/16	18	100	22	-	8	6,2	3	2184-1
48139735	1/2	16	100	22	-	9	7	3	2184-1
48139737	5/8	14	110	27	-	12	9	3	2184-1
48139739	3/4	12	125	27	-	14	11	4	2184-1
48139742	1	10	160	36	-	18	14,5	4	2184-1

A-SFT

Threading | Cutting taps | BA

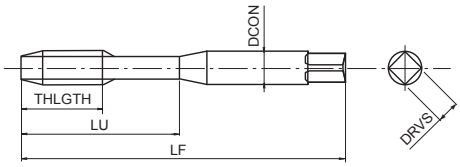

- First choice in quality and performance
- Powder metal spiral-fluted cutting tap for blind holes
- Multilayer TiCN coating
- High speed tapping in general steels, aluminium, stainless steels

P	P	P	P	M	N	N	S	H	
C <0,2%	0,25<C<0,4	C ≥ 0,45%	SCM	INOX	Al	AC, ADC	Ti	25-35 HRC	
15-60	15-60	10-60	8-30	8-20	15-35	15-35	5-10	8-20	m/min

A | BA (BS93) | PM | V | 45° | C/2,5

EDP	TD	LF	THLGTH	LU	DCON	DRVS	NOF
48139910	0	66	19	30	6,3	5	3
48139911	1	62	17	26	5,6	4,5	3
48139912	2	58	16	25	5	4	3
48139913	3	53	13	21	4,5	3,55	2
48139914	4	50	13	20	3,55	2,8	2
48139915	5	48	11	18	3,15	2,5	2
48139916	6	44,5	9,5	-	2,8	2,24	2
48139917	7	44,5	9,5	-	2,8	2,24	2
48139918	8	44,5	9,5	-	2,8	2,24	2
48139919	9	41	8	-	2,5	2	2
48139920	10	41	8	-	2,5	2	2
48139921	11	41	8	-	2,5	2	2
48139922	12	40	7	-	2,5	2	2

A-TPT

Threading | Cutting taps | RC (BSPT)

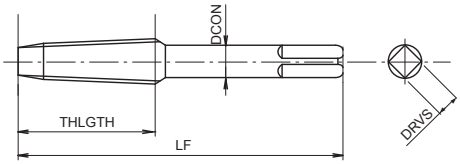

- First choice in quality and performance
- Powder metal straight flute cutting tap for through and blind holes
- Multilayer TiCN coating
- High speed tapping in general steels and aluminium
- RC (BSPT) tapered 1:16

P	P	P	P	N	N	
C <0,2%	0,25<C<0,4	C ≥ 0,45%	SCM	Al	AC, ADC	
5-10	5-10	5-10	5-10	5-10	10-15	m/min

A | Rc (PT) | PM | V | C/2,5 | DIN 5156

EDP	TD	TP	LF	THLGTH	DCON	DRVS	NOF	DIN
48212384	1/8	28	90	15	7	5,5	4	5156
48212394	1/4	19	100	19	11	9	4	5156
48212404	3/8	19	110	21	12	9	4	5156
48212414	1/2	14	125	26	16	12	4	5156
48212434	3/4	14	140	28	20	16	4	5156
48212454	1	11	160	33	25	20	4	5156

A-SFT RC

Threading | Cutting taps | RC (BSPT)

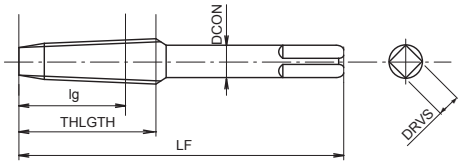

- First choice in quality and performance
- Powder metal spiral flute cutting tap for blind holes
- Multilayer TiCN coating
- High speed tapping in general steels and aluminium
- RC (BSPT) tapered 1:16

P	P	P	P	N	N	
C <0,2%	0,25<C<0,4	C ≥ 0,45%	SCM	Al	AC, ADC	
5-10	5-10	5-10	5-10	5-10	10-15	m/min

A | Rc (BSPT) | PM | V | 45° | C/2,5 | DIN 5156

EDP	TD	TP	LF	lg	THLGTH	DCON	DRVS	NOF	DIN
48302374	1/16	28	90	10,1	14	6	4,9	3	5156
48302384	1/8	28	90	10,1	15	7	5,5	3	5156
48302394	1/4	19	100	15	19	11	9	3	5156
48302404	3/8	19	100	15,4	21	12	9	4	5156
48302414	1/2	14	125	20,5	26	16	12	4	5156
48302434	3/4	14	140	21,8	28	20	16	4	5156
48302454	1	11	160	26	33	25	23	4	5156

A-SFT NPT

Threading | Cutting taps | NPT

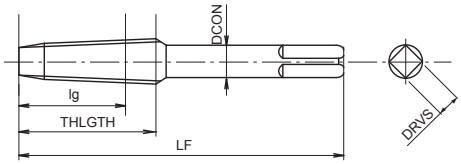

- First choice in quality and performance
- Powder metal spiral flute cutting tap for blind holes
- Multilayer TiCN coating
- High speed tapping in general steels and aluminium
- NPT tapered 1:16

P	P	P	P	N	N	
C <0,2%	0,25<C<0,4	C ≥ 0,45%	SCM	Al	AC, ADC	
5-10	5-10	5-10	5-10	5-10	10-15	m/min

A | NPT | PM | V | 45° | C/2,5 | DIN 5156

EDP	TD	TP	LF	lg	THLGTH	DCON	DRVS	NOF	DIN
48331500	1/16	27	90	12	18	6	4,9	3	5156
48331600	1/8	27	90	12,05	19	7	5,5	3	5156
48331700	1/4	18	100	17,45	28	11	9	3	5156
48331800	3/8	18	110	17,65	28	12	9	4	5156
48331900	1/2	14	125	22,85	35	16	12	4	5156
48331000	3/4	14	140	22,95	35	20	16	4	5156
48331100	1	11,5	160	27,4	45	25	20	4	5156

A-SFT FORM E NEW

Threading | Cutting taps | NPSF

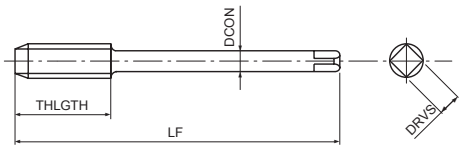

- First choice in quality and performance
- Powder metal spiral-fluted cutting tap for blind holes
- Multilayer TiCN coating
- High speed tapping in general steels, aluminium, stainless steels
- Chamfer Form E

P	P	P	P	M	N	N	S	H	
C <0,2%	0,25<C<0,4	C ≥ 0,45%	SCM	INOX	Al	AC, ADC	Ti	25-35 HRC	
15-60	15-60	10-60	8-30	8-20	15-35	15-35	5-10	8-20	m/min

A | NPSF | PM | V | 45° | E/1,5 | DIN 5156

EDP	TD	TP	LF	THLGTH	DCON	DRVS	NOF	DIN
48203885	1/16	27	90	14	6	4,9	3	5156
48203886	1/8	27	90	20	7	5,5	3	5156
48203887	1/4	18	100	22	11	9	3	5156
48203888	3/8	18	100	22	12	9	4	5156
48203889	1/2	14	125	25	16	12	4	5156
48203890	3/4	14	140	28	20	16	4	5156
48203891	1	11 1/2	160	30	25	20	4	5156

A-POT

Threading | Cutting taps | Metric

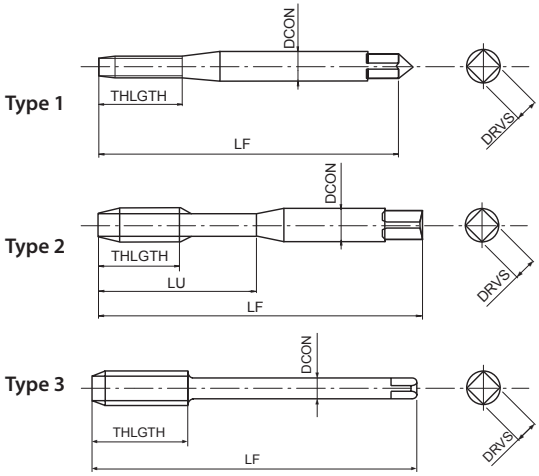

- First choice in quality and performance
- Powder metal spiral-point cutting tap for through holes
- Multilayer TiCN coating
- High speed tapping in general steels, aluminium, stainless steels

P	P	P	P	M	N	N	S	H	
C <0,2%	0,25<C<0,4	C ≥ 0,45%	SCM	INOX	Al	AC, ADC	Ti	25-35 HRC	
15-60	15-60	10-60	8-30	8-20	15-35	15-35	5-10	8-20	m/min

A	M	PM	V	ISO 2 6HX	B/4		DIN 371	DIN 376

*Tolerance 5 HX

EDP	TD	TP	LF	THLGTH	LU	DCON	DRVS	NOF	Type	DIN
*48145111	1	0,25	40	5	-	2,5	2,1	2	1	371
*48145112	1,1	0,25	40	5	-	2,5	2,1	2	1	371
*48145113	1,2	0,25	40	5	-	2,5	2,1	2	1	371
*48145115	1,4	0,3	40	7	-	2,5	2,1	2	1	371
48145118	1,6	0,35	40	8	-	2,5	2,1	2	1	371
48145119	1,7	0,35	40	8	-	2,5	2,1	2	1	371
48145120	1,8	0,35	40	8	-	2,5	2,1	2	1	371
48145125	2	0,4	45	8	-	2,8	2,1	2	1	371
48145127	2,2	0,45	45	9	-	2,8	2,1	2	1	371
48145128	2,3	0,4	45	9	-	2,8	2,1	2	1	371
48145133	2,5	0,45	50	9	-	2,8	2,1	2	1	371
48145136	2,6	0,45	50	9	-	2,8	2,1	2	1	371
48145138	3	0,5	56	11	18	3,5	2,7	3	2	371
48145142	3,5	0,6	56	12	20	4	3	3	2	371
48145144	4	0,7	63	13	21	4,5	3,4	3	2	371
48145147	4,5	0,75	70	16	25	6	4,9	3	2	371
48145149	5	0,8	70	16	25	6	4,9	3	2	371
48145152	5,5	0,9	80	17	30	6	4,9	3	2	371
48145155	6	1	80	19	30	6	4,9	3	2	371
48145158	7	1	80	19	30	7	5,5	3	2	371
48145161	8	1,25	90	22	35	8	6,2	3	2	371
48145165	9	1,25	90	22	35	9	7	3	2	371
48145169	10	1,5	100	24	39	10	8	3	2	371
48145139	3	0,5	56	11	-	2,2	-	3	3	376
48145185	4	0,7	63	13	-	2,8	2,1	3	3	376
48145150	5	0,8	70	16	-	3,5	2,7	3	3	376
48145187	6	1	80	19	-	4,5	3,4	3	3	376
48145159	7	1	80	19	-	5,5	4,3	3	3	376
48145188	8	1,25	90	22	-	6	4,9	3	3	376
48145166	9	1,25	90	22	-	7	5,5	3	3	376
48145189	10	1,5	100	24	-	7	5,5	3	3	376
48145175	11	1,5	100	24	-	8	6,2	3	3	376
48145179	12	1,75	110	28	-	9	7	3	3	376
48145191	14	2	110	30	-	11	9	3	3	376
48145202	16	2	110	32	-	12	9	3	3	376
48145214	18	2,5	125	34	-	14	11	3	3	376
48145228	20	2,5	140	34	-	16	12	3	3	376
48145238	22	2,5	140	34	-	18	14,5	3	3	376
48145247	24	3	160	38	-	18	14,5	3	3	376

A-OIL-POT

Threading | Cutting taps | Metric

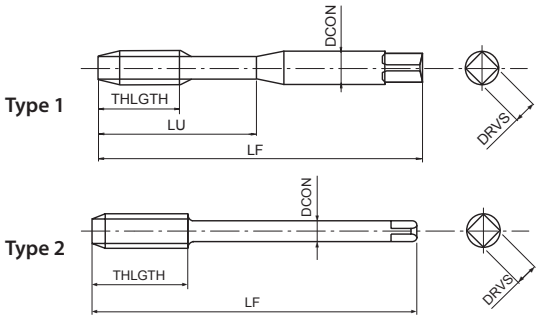

- First choice in quality and performance
- Powder metal spiral-point cutting tap for through holes
- Multilayer TiCN coating
- High speed tapping in general steels, aluminium, stainless steels
- Side through coolant

P ◉	P ◉	P ◉	P ◉	M ◉	N ○	N ○	S ○	H ○	
C <0,2%	0,25<C<0,4	C ≥ 0,45%	SCM	INOX	Al	AC, ADC	Ti	25-35 HRC	
15-60	15-60	10-60	8-30	8-20	15-35	15-35	5-10	8-20	m/min

A	M	PM	V	ISO 2 6HX	B/4			DIN 371	DIN 376

EDP	TD	TP	LF	THLGTH	LU	DCON	DRVS	NOF	Type	DIN
48214155	6	1	80	19	30	6	4,9	3	1	371
48214161	8	1,25	90	22	35	8	6,2	3	1	371
48214169	10	1,5	100	24	39	10	8	3	1	371
48214179	12	1,75	110	28	-	9	7	3	2	376
48214191	14	2	110	30	-	11	9	3	2	376
48214202	16	2	110	32	-	12	9	3	2	376
48214214	18	2,5	125	34	-	14	11	3	2	376
48214228	20	2,5	140	34	-	16	12	3	2	376
48214238	22	2,5	140	34	-	18	14,5	3	2	376
48214247	24	3	160	38	-	18	14,5	3	2	376

A-POT 6GX

Threading | Cutting taps | Metric

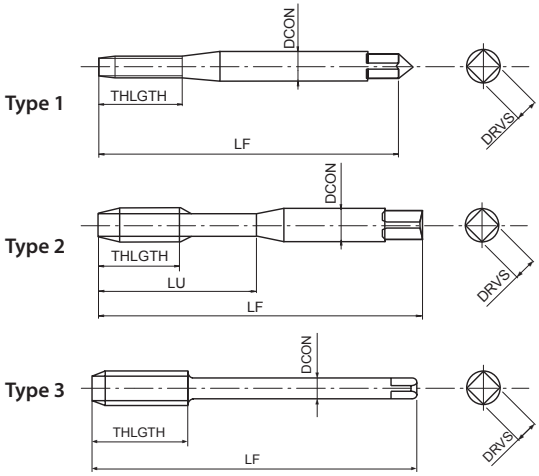

- First choice in quality and performance
- Powder metal spiral-point cutting tap for through holes
- Multilayer TiCN coating
- High speed tapping in general steels, aluminium, stainless steels
- For 6G internal thread tolerance

P ◉	P ◉	P ◉	P ◉	M ◉	N ○	N ○	S ○	H ○	
C <0,2%	0,25<C<0,4	C ≥ 0,45%	SCM	INOX	Al	AC, ADC	Ti	25-35 HRC	
15-60	15-60	10-60	8-30	8-20	15-35	15-35	5-10	8-20	m/min

A	M	PM	V	ISO 3 6GX	B/4		DIN 371	DIN 376

EDP	TD	TP	Oversize	LF	THLGTH	LU	DCON	DRVS	NOF	Type	DIN
48205125	2	0,4	0,0190	45	8	-	2,8	2,1	2	1	371
48205133	2,5	0,45	0,0200	50	9	-	2,8	2,1	2	1	371
48205138	3	0,5	0,0200	56	11	18	3,5	2,7	3	2	371
48205144	4	0,7	0,0220	63	13	21	4,5	3,4	3	2	371
48205149	5	0,8	0,0240	70	16	25	6	4,9	3	2	371
48205155	6	1	0,0260	80	19	30	6	4,9	3	2	371
48205161	8	1,25	0,0280	90	22	35	8	6,2	3	2	371
48205169	10	1,5	0,0320	100	24	39	10	8	3	2	371
48205179	12	1,75	0,0340	110	28	-	9	7	3	3	376
48205191 NEW	14	2	0,0380	110	30	-	11	9	3	3	376
48205202	16	2	0,0380	110	32	-	12	9	3	3	376

A-POT 7GX

Threading | Cutting taps | Metric

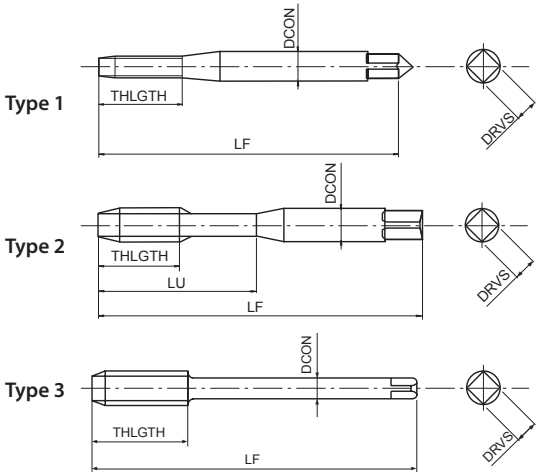

- First choice in quality and performance
- Powder metal spiral-point cutting tap for through holes
- Multilayer TiCN coating
- High speed tapping in general steels, aluminium, stainless steels
- For 7G internal thread tolerance

P ◉	P ◉	P ◉	P ◉	M ◉	N ○	N ○	S ○	H ○	
C <0,2%	0,25<C<0,4	C ≥ 0,45%	SCM	INOX	Al	AC, ADC	Ti	25-35 HRC	
15-60	15-60	10-60	8-30	8-20	15-35	15-35	5-10	8-20	m/min

A | M | PM | V | 7GX | B/4 | DIN 371 | DIN 376

EDP	TD	TP	Oversize	LF	THLGTH	LU	DCON	DRVS	NOF	Type	DIN
48206125	2	0,4	0,0380	45	8	-	2,8	2,1	2	1	371
48206133	2,5	0,45	0,0400	50	9	-	2,8	2,1	2	1	371
48206138	3	0,5	0,0400	56	11	18	3,5	2,7	3	2	371
48206144	4	0,7	0,0440	63	13	21	4,5	3,4	3	2	371
48206149	5	0,8	0,0480	70	16	25	6	4,9	3	2	371
48206155	6	1	0,0520	80	19	30	6	4,9	3	2	371
48206161	8	1,25	0,0560	90	22	35	8	6,2	3	2	371
48206169	10	1,5	0,0640	100	24	39	10	8	3	2	371
48206179	12	1,75	0,0680	110	14	-	28	7	3	3	376
48206191 NEW	14	2	0,0760	110	30	-	11	9	3	3	376
48206202	16	2	0,0760	110	16	-	32	9	3	3	376

A-POT +0.1

Threading | Cutting taps | Metric

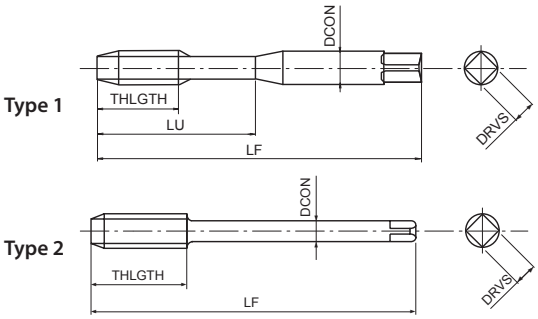

- First choice in quality and performance
- Powder metal spiral-point cutting tap for through holes
- Multilayer TiCN coating
- High speed tapping in general steels, aluminium, stainless steels
- Oversized tap for 6H +0,1mm thread tolerance

P ◉	P ◉	P ◉	P ◉	M ◉	N ○	N ○	S ○	H ○	
C <0,2%	0,25<C<0,4	C ≥ 0,45%	SCM	INOX	Al	AC, ADC	Ti	25-35 HRC	
15-60	15-60	10-60	8-30	8-20	15-35	15-35	5-10	8-20	m/min

A	M	PM	V	6H +0.1	B/4		DIN 371	DIN 376

EDP	TD	TP	LF	THLGTH	LU	DCON	DRVS	NOF	Type	DIN
48259138	3	0,5	56	11	18	3,5	2,7	3	1	371
48259144	4	0,7	63	13	21	4,5	3,4	3	1	371
48259149	5	0,8	70	16	25	6	4,9	3	1	371
48259155	6	1	80	19	30	6	4,9	3	1	371
48259161	8	1,25	90	22	35	8	6,2	3	1	371
48259169	10	1,5	100	24	39	10	8	3	1	371
48259179	12	1,75	110	28	-	9	7	3	2	376
48259202	16	2	110	32	-	12	9	3	2	376

A-LT-POT

Threading | Cutting taps | Metric

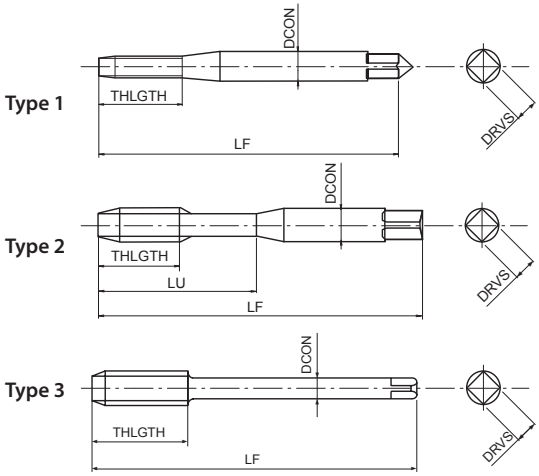

- First choice in quality and performance
- Powder metal spiral-point cutting tap for through holes
- Multilayer TiCN coating
- High speed tapping in general steels, aluminium, stainless steels
- With long shank for long reach threading

P ◉	P ◉	P ◉	P ◉	M ◉	N ○	N ○	S ○	H ○	
C <0,2%	0,25<C<0,4	C ≥ 0,45%	SCM	INOX	Al	AC, ADC	Ti	25-35 HRC	
15-60	15-60	10-60	8-30	8-20	15-35	15-35	5-10	8-20	m/min

A	M	PM	V	ISO 2 6HX	B/4		DIN 371	DIN 376

EDP	TD	TP	LF	THLGTH	LU	DCON	DRVS	NOF	Type	DIN
48210125	2	0,4	80	8	-	2,8	2,1	2	1	371
48210133	2,5	0,45	100	9	-	2,8	2,1	2	1	371
48210138	3	0,5	100	11	18	3,5	2,7	3	2	371
48210144	4	0,7	125	13	21	4,5	3,4	3	2	371
48210149	5	0,8	160	16	25	6	4,9	3	2	371
48210155	6	1	160	19	30	6	4,9	3	2	371
48210161	8	1,25	180	22	35	8	6,2	3	2	371
48210169	10	1,5	200	24	39	10	8	3	2	371
48211155	6	1	160	19	-	4,5	3,4	3	3	376
48211161	8	1,25	180	22	-	6	4,9	3	3	376
48211169	10	1,5	200	24	-	7	5,5	3	3	376
48211179	12	1,75	200	28	-	9	7	3	3	376
48211191	14	2	200	30	-	11	9	3	3	376
48211202	16	2	200	32	-	12	9	3	3	376
48211214	18	2,5	200	34	-	14	11	3	3	376
48211228	20	2,5	200	34	-	16	12	3	3	376

A-POT-LH

Threading | Cutting taps | Metric

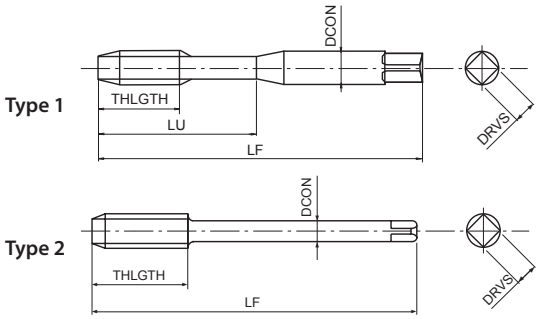

- First choice in quality and performance
- Powder metal spiral-point cutting tap for through holes
- Multilayer TiCN coating
- High speed tapping in general steels, aluminium, stainless steels
- For left-hand threads

P ◉	P ◉	P ◉	P ◉	M ◉	N ○	N ○	S ○	H ○	
C <0,2%	0,25<C<0,4	C ≥ 0,45%	SCM	INOX	Al	AC, ADC	Ti	25-35 HRC	
15-60	15-60	10-60	8-30	8-20	15-35	15-35	5-10	8-20	m/min

A	M	PM	V	ISO 2 6HX	B/4		DIN 371	DIN 376	LH

EDP	TD	TP	LF	THLGTH	LU	DCON	DRVS	NOF	Type	DIN
48218138	3	0,5	56	11	18	3,5	2,7	3	1	371
48218144	4	0,7	63	13	21	4,5	3,4	3	1	371
48218149	5	0,8	70	16	25	6	4,9	3	1	371
48218155	6	1	80	19	30	6	4,9	3	1	371
48218161	8	1,25	90	22	35	8	6,2	3	1	371
48218169	10	1,5	100	24	39	10	8	3	1	371
48218179	12	1,75	110	28	-	9	7	3	2	376
48218191	14	2	110	30	-	11	9	3	2	376
48218202	16	2	110	32	-	12	9	3	2	376
48218214	18	2,5	125	34	-	14	11	3	2	376
48218228	20	2,5	140	34	-	16	12	3	2	376
48218238	22	2,5	140	34	-	18	14,5	3	2	376
48218247	24	3	160	38	-	18	14,5	3	2	376

A-POT-HB Weldon

Threading | Cutting taps | Metric

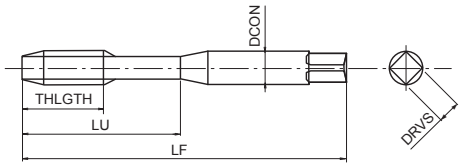

- First choice in quality and performance
- Powder metal spiral-point cutting tap for through holes
- Multilayer TiCN coating
- High speed tapping in general steels, aluminium, stainless steels
- With Weldon shank

P ◉	P ◉	P ◉	P ◉	M ◉	N ○	N ○	S ○	H ○	
C <0,2%	0,25<C<0,4	C ≥ 0,45%	SCM	INOX	Al	AC, ADC	Ti	25-35 HRC	
15-60	15-60	10-60	8-30	8-20	15-35	15-35	5-10	8-20	m/min

A | M | PM | V | ISO 2 6HX | B/4 | DIN 371 | DIN 376 | DIN 1835 | HB

EDP	TD	TP	LF	THLGTH	LU	DCON	DRVS	NOF	DIN
48221138	3	0,5	56	11	18	6	4,9	3	371/1835
48221144	4	0,7	63	13	21	6	4,9	3	371/1835
48221149	5	0,8	70	16	25	6	4,9	3	371/1835
48221155	6	1	80	19	30	6	4,9	3	371/1835
48221161	8	1,25	90	22	35	8	6,2	3	371/1835
48221169	10	1,5	100	24	39	10	8	3	371/1835
48221179	12	1,75	110	28	46	12	9	3	376/1835
48221191	14	2	110	30	49	14	11	3	376/1835
48221202	16	2	110	32	56	16	12	3	376/1835

A-POT

Threading | Cutting taps | Metric Fine

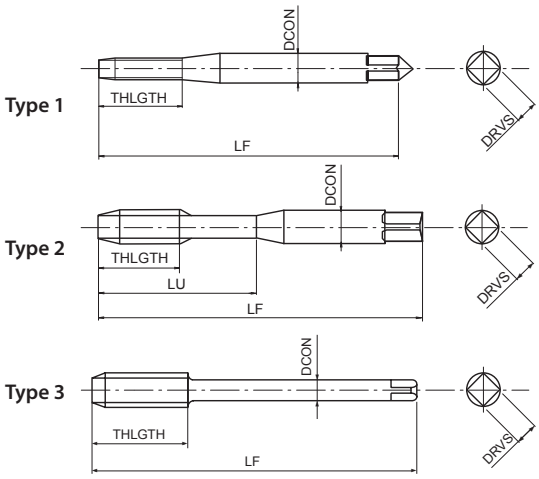

- First choice in quality and performance
- Powder metal spiral-point cutting tap for through holes
- Multilayer TiCN coating
- High speed tapping in general steels, aluminium, stainless steels

P	P	P	P	M	N	N	S	H	
C <0,2%	0,25<C<0,4	C ≥ 0,45%	SCM	INOX	Al	AC, ADC	Ti	25-35 HRC	
15-60	15-60	10-60	8-30	8-20	15-35	15-35	5-10	8-20	m/min

A | MF | PM | V | ISO 2 6HX | B/4 | DIN 371 | DIN 374

EDP	TD	TP	LF	THLGTH	LU	DCON	DRVS	NOF	Type	DIN
48145135	2,5	0,35	50	-	9	2,8	2,1	2	1	371
48145137	2,6	0,35	50	-	9	2,8	2,1	2	1	371
48145141	3	0,35	56	8	18	3,5	2,7	3	2	371
48145143	3,5	0,35	56	9	20	4	3	3	2	371
48145146	4	0,35	63	10	21	4,5	3,4	3	2	371
48145145	4	0,5	63	10	21	4,5	3,4	3	2	371
48145148	4,5	0,5	70	12	25	6	4,9	3	2	371
48145151	5	0,5	70	12	25	6	4,9	3	2	371
48145602	6	0,5	80	14	30	6	4,9	3	2	371
48145601	6	0,75	80	14	30	6	4,9	3	2	371
48145160	7	0,75	80	14	30	7	5,5	3	2	371
48145604	8	0,75	80	18	30	8	6,2	3	2	371
48145603	8	1	90	22	35	8	6,2	3	2	371
48145605	9	1	90	22	35	9	7	3	2	371
48145608	10	0,75	90	20	35	10	8	3	2	371
48145607	10	1	90	20	35	10	8	3	2	371
48145606	10	1,25	100	24	39	10	8	3	2	371
48145157	6	0,5	80	14	-	4,5	3,4	3	3	374
48145156	6	0,75	80	14	-	4,5	3,4	3	3	374
48145163	8	0,75	80	18	-	6	4,9	3	3	374
48145162	8	1	90	22	-	6	4,9	3	3	374
48145167	9	1	90	22	-	7	5,5	3	3	374
48145172	10	0,75	90	20	-	7	5,5	3	3	374
48145171	10	1	90	20	-	7	5,5	3	3	374
48145170	10	1,25	100	24	-	7	5,5	3	3	374
48145176	11	1	90	20	-	8	6,2	3	3	374
48145182	12	1	100	22	-	9	7	3	3	374
48145181	12	1,25	100	22	-	9	7	3	3	374
48145180	12	1,5	100	22	-	9	7	3	3	374
48145194	14	1	100	22	-	11	9	4	3	374
48145193	14	1,25	100	22	-	11	9	4	3	374
48145192	14	1,5	100	22	-	11	9	4	3	374
48145204	16	1	100	22	-	12	9	4	3	374
48145203	16	1,5	100	22	-	12	9	4	3	374
48145218	18	1	110	25	-	14	11	4	3	374
48145216	18	1,5	110	25	-	14	11	4	3	374
48145232	20	1	125	25	-	16	12	4	3	374
48145230	20	1,5	125	25	-	16	12	4	3	374
48145220	20	2	140	34	-	16	12	4	3	374
48145241	22	1	125	25	-	18	14,5	4	3	374
48145240	22	1,5	125	25	-	18	14,5	4	3	374
48145239	22	2	140	34	-	18	14,5	4	3	374
48145251	24	1	140	28	-	18	14,5	4	3	374
48145250	24	1,5	140	28	-	18	14,5	4	3	374
48145249	24	2	140	28	-	18	14,5	4	3	374

A-OIL-POT

Threading | Cutting taps | Metric Fine

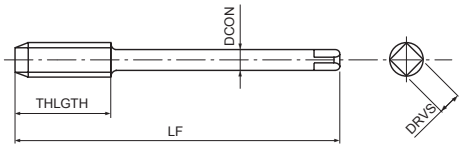

- First choice in quality and performance
- Powder metal spiral-point cutting tap for through holes
- Multilayer TiCN coating
- High speed tapping in general steels, aluminium, stainless steels
- Side through coolant

P	P	P	P	M	N	N	S	H	
C <0,2%	0,25<C<0,4	C ≥ 0,45%	SCM	INOX	Al	AC, ADC	Ti	25-35 HRC	
15-60	15-60	10-60	8-30	8-20	15-35	15-35	5-10	8-20	m/min

A | MF | PM | V | ISO 2 6HX | B/4 | DIN 374

EDP	TD	TP	LF	THLGTH	DCON	DRVS	NOF	DIN
48214162	8	1	90	22	6	4,9	3	374
48214171	10	1	90	20	7	5,5	3	374
48214170	10	1,25	100	24	7	5,5	3	374
48214180	12	1,5	100	22	9	7	3	374
48214192	14	1,5	100	22	11	9	4	374
48214203	16	1,5	100	22	12	9	4	374
48214216	18	1,5	110	25	14	11	4	374
48214230	20	1,5	125	25	16	12	4	374

A-POT 6GX

Threading | Cutting taps | Metric Fine

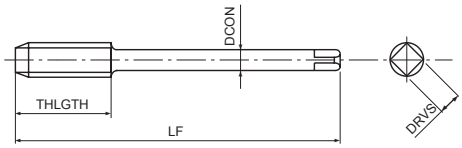

- First choice in quality and performance
- Powder metal spiral-point cutting tap for through holes
- Multilayer TiCN coating
- High speed tapping in general steels, aluminium, stainless steels
- For 6G internal thread tolerance

P	P	P	P	M	N	N	S	H	
C <0,2%	0,25<C<0,4	C ≥ 0,45%	SCM	INOX	Al	AC, ADC	Ti	25-35 HRC	
15-60	15-60	10-60	8-30	8-20	15-35	15-35	5-10	8-20	m/min

A | MF | PM | V | ISO 3 6GX | B/4 | DIN 374

EDP	TD	TP	Oversize	LF	THLGTH	DCON	DRVS	NOF	DIN
48205156	6	0,75	0,0220	80	14	4,5	3,4	3	374
48205163	8	0,75	0,0220	80	18	6	4,9	3	374
48205162	8	1	0,0260	80	22	6	4,9	3	374
48205171	10	1	0,0260	90	20	7	5,5	3	374
48205170	10	1,25	0,0280	90	24	7	5,5	3	374
48205182	12	1	0,0260	100	22	9	7	3	374
48205181	12	1,25	0,0280	100	22	9	7	3	374
48205180	12	1,5	0,0320	100	22	9	7	3	374
48205192	14	1,5	0,0320	100	22	11	9	4	374
48205203	16	1,5	0,0320	100	22	12	9	4	374
48205216	18	1,5	0,0320	100	25	14	11	4	374
48205230	20	1,5	0,0320	125	25	16	12	4	374
48205240	22	1,5	0,0320	125	25	18	14,5	4	374
48205250	24	1,5	0,0320	140	28	18	14,5	4	374

A-POT

Threading | Cutting taps | UNC

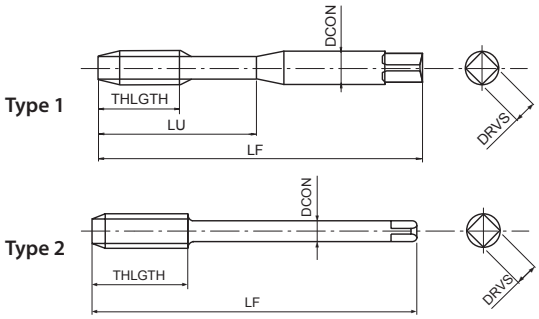

- First choice in quality and performance
- Powder metal spiral-point cutting tap for through holes
- Multilayer TiCN coating
- High speed tapping in general steels, aluminium, stainless steels

P ◉	P ◉	P ◉	P ◉	M ◉	N ○	N ○	S ○	H ○	
C <0,2%	0,25<C<0,4	C ≥ 0,45%	SCM	INOX	Al	AC, ADC	Ti	25-35 HRC	
15-60	15-60	10-60	8-30	8-20	15-35	15-35	5-10	8-20	m/min

A	UNC	PM	V	ANSI 2BX	B/4		DIN 2184-1	DIN 2184-1

EDP	TD	TP	LF	THLGTH	LU	DCON	DRVS	NOF	Type	DIN
48145453	2	56	45	-	9	2,8	2,1	2	1	2184-1
48145455	3	48	50	-	9	2,8	2,1	2	1	2184-1
48145457	4	40	56	11	18	3,5	2,7	2	1	2184-1
48145459	5	40	56	11	18	3,5	2,7	3	1	2184-1
48145461	6	32	56	12	20	4	3	3	1	2184-1
48145464	8	32	63	13	21	4,5	3,4	3	1	2184-1
48145466	10	24	70	16	25	6	4,9	3	1	2184-1
48145468	12	24	80	17	30	6	4,9	3	1	2184-1
48145471	1/4	20	80	19	30	7	5,5	3	1	2184-1
48145474	5/16	18	90	22	35	8	6,2	3	1	2184-1
48145479	3/8	16	100	24	39	10	8	3	1	2184-1
48145484	7/16	14	100	24	-	8	6,2	3	2	2184-1
48145489	1/2	13	110	28	-	9	7	3	2	2184-1
48145494	9/16	12	110	30	-	11	9	3	2	2184-1
48145501	5/8	11	110	32	-	12	9	3	2	2184-1
48145515	3/4	10	125	34	-	14	11	3	2	2184-1
48145526	7/8	9	140	34	-	18	14,5	3	2	2184-1
48145538	1	8	160	38	-	18	14,5	3	2	2184-1

A-POT

Threading | Cutting taps | UNF

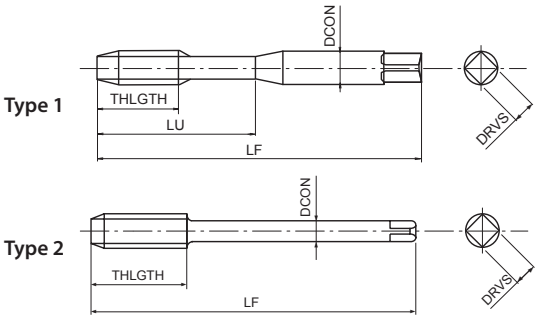

- First choice in quality and performance
- Powder metal spiral-point cutting tap for through holes
- Multilayer TiCN coating
- High speed tapping in general steels, aluminium, stainless steels

P ◉	P ◉	P ◉	P ◉	M ◉	N ○	N ○	S ○	H ○	
C <0,2%	0,25<C<0,4	C ≥ 0,45%	SCM	INOX	Al	AC, ADC	Ti	25-35 HRC	
15-60	15-60	10-60	8-30	8-20	15-35	15-35	5-10	8-20	m/min

A	UNF	PM	V	ANSI 2BX	B/4		DIN 2184-1	DIN 2184-1

EDP	TD	TP	LF	THLGTH	LU	DCON	DRVS	NOF	Type	DIN
48145454	2	64	45	-	9	2,8	2,1	2	1	2184-1
48145456	3	56	50	-	9	2,8	2,1	2	1	2184-1
48145458	4	48	56	11	18	3,5	2,7	2	1	2184-1
48145460	5	44	56	11	18	3,5	2,7	3	1	2184-1
48145462	6	40	56	12	20	4	3	3	1	2184-1
48145465	8	36	63	13	21	4,5	3,4	3	1	2184-1
48145467	10	32	70	16	25	6	4,9	3	1	2184-1
48145469	12	28	80	17	30	6	4,9	3	1	2184-1
48145472	1/4	28	80	19	30	7	5,5	3	1	2184-1
48145476	5/16	24	90	22	35	8	6,2	3	1	2184-1
48145481	3/8	24	90	20	35	10	8	3	1	2184-1
48145486	7/16	20	100	24	-	8	6,2	3	2	2184-1
48145491	1/2	20	100	22	-	9	7	3	2	2184-1
48145496	9/16	18	100	22	-	11	9	3	2	2184-1
48145504	5/8	18	100	22	-	12	9	3	2	2184-1
48145517	3/4	16	110	25	-	14	11	3	2	2184-1
48145528	7/8	14	125	25	-	18	14,5	3	2	2184-1
48145539	1	12	140	28	-	18	14,5	3	2	2184-1

A-POT

Threading | Cutting taps | G (BSP)

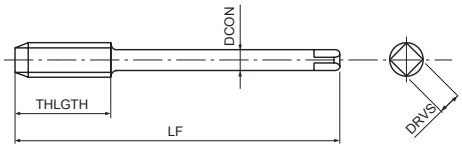

- First choice in quality and performance
- Powder metal spiral-point cutting tap for through holes
- Multilayer TiCN coating
- High speed tapping in general steels, aluminium, stainless steels

P ◉	P ◉	P ◉	P ◉	M ◉	N ○	N ○	S ○	H ○	
C <0,2%	0,25<C<0,4	C ≥ 0,45%	SCM	INOX	Al	AC, ADC	Ti	25-35 HRC	
15-60	15-60	10-60	8-30	8-20	15-35	15-35	5-10	8-20	m/min

A | G | PM | V | B/4 | DIN 5156

EDP	TD	TP	LF	THLGTH	DCON	DRVS	NOF	DIN
48145900	1/8	28	90	20	7	5,5	3	5156
48145000	1/4	19	100	22	11	9	3	5156
48145100	3/8	19	100	22	12	9	3	5156
48145200	1/2	14	125	25	16	12	3	5156
48145300	5/8	14	125	25	18	14,5	4	5156
48145400	3/4	14	140	28	20	16	4	5156
48145500	7/8	14	150	28	22	18	4	5156
48145600	1	11	160	30	25	20	4	5156

A-POT

Threading | Cutting taps | BSW

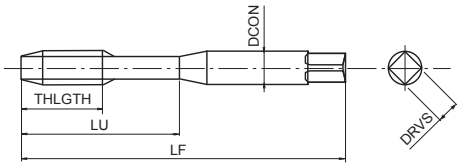

- First choice in quality and performance
- Powder metal spiral-point cutting tap for through holes
- Multilayer TiCN coating
- High speed tapping in general steels, aluminium, stainless steels

P	P	P	P	M	N	N	S	H	
C <0,2%	0,25<C<0,4	C ≥ 0,45%	SCM	INOX	Al	AC, ADC	Ti	25-35 HRC	
15-60	15-60	10-60	8-30	8-20	15-35	15-35	5-10	8-20	m/min

A | BSW | PM | V | MED | B/4 | DIN 2184-1

EDP	TD	TP	LF	THLGTH	LU	DCON	DRVS	NOF	DIN
48205702	1/8	40	56	11	18	3,5	2,7	3	2184-1
48205704	3/16	24	70	16	25	6	4,9	3	2184-1
48205706	1/4	20	80	19	30	7	5,5	3	2184-1
48205707	5/16	18	90	22	35	8	6,2	3	2184-1
48205708	3/8	16	100	24	39	10	8	3	2184-1
48205709	7/16	14	100	24	-	8	6,2	3	2184-1
48205710	1/2	12	110	28	-	9	7	3	2184-1
48205712	5/8	11	110	32	-	12	9	3	2184-1
48205713	3/4	10	125	34	-	14	11	3	2184-1
48205714	7/8	9	140	34	-	18	14,5	3	2184-1
48205715	1	8	160	38	-	18	14,5	3	2184-1

A-POT

Threading | Cutting taps | BSF

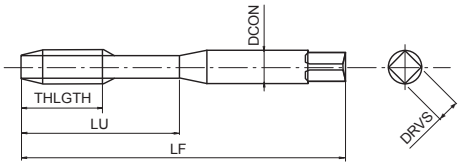

- First choice in quality and performance
- Powder metal spiral-point cutting tap for through holes
- Multilayer TiCN coating
- High speed tapping in general steels, aluminium, stainless steels

P ◉	P ◉	P ◉	P ◉	M ◉	N ○	N ○	S ○	H ○	
C <0,2%	0,25<C<0,4	C ≥ 0,45%	SCM	INOX	Al	AC, ADC	Ti	25-35 HRC	
15-60	15-60	10-60	8-30	8-20	15-35	15-35	5-10	8-20	m/min

A | BSF | PM | V | MED | B/4 | DIN 2184-1

EDP	TD	TP	LF	THLGTH	LU	DCON	DRVS	NOF	DIN
48205731	1/4	26	80	19	30	7	5,5	3	2184-1
48205732	5/16	22	90	22	35	8	6,2	3	2184-1
48205733	3/8	20	100	24	39	10	8	3	2184-1
48205734	7/16	18	100	24	-	8	6,2	3	2184-1
48205735	1/2	16	100	22	-	9	7	3	2184-1
48205737	5/8	14	110	32	-	12	9	3	2184-1
48205739	3/4	12	125	34	-	14	11	3	2184-1
48205742	1	10	160	38	-	18	14,5	3	2184-1

A-POT

Threading | Cutting taps | BA

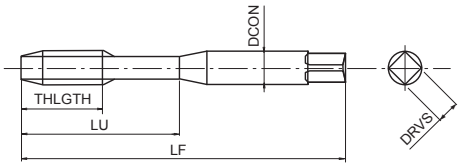

- First choice in quality and performance
- Powder metal spiral-point cutting tap for through holes
- Multilayer TiCN coating
- High speed tapping in general steels, aluminium, stainless steels

P	P	P	P	M	N	N	S	H	
C <0,2%	0,25<C<0,4	C ≥ 0,45%	SCM	INOX	Al	AC, ADC	Ti	25-35 HRC	
15-60	15-60	10-60	8-30	8-20	15-35	15-35	5-10	8-20	m/min

A | BA (BS93) | PM | V | B/4

EDP	TD	LF	THLGTH	LU	DCON	DRVS	NOF
48205910	0	66	19	30	6,3	5	3
48205911	1	62	17	26	5,6	4,5	3
48205912	2	58	16	25	5	4	3
48205913	3	53	13	21	4,5	3,55	3
48205914	4	50	13	20	3,55	2,8	3
48205915	5	48	11	18	3,15	2,5	3
48205916	6	44,5	9,5	-	2,8	2,24	2
48205917	7	44,5	9,5	-	2,8	2,24	2
48205918	8	44,5	9,5	-	2,8	2,24	2
48205919	9	41	8	-	2,5	2	2
48205920	10	41	8	-	2,5	2	2
48205921	11	41	8	-	2,5	2	2
48205922	12	40	7	-	2,5	2	2

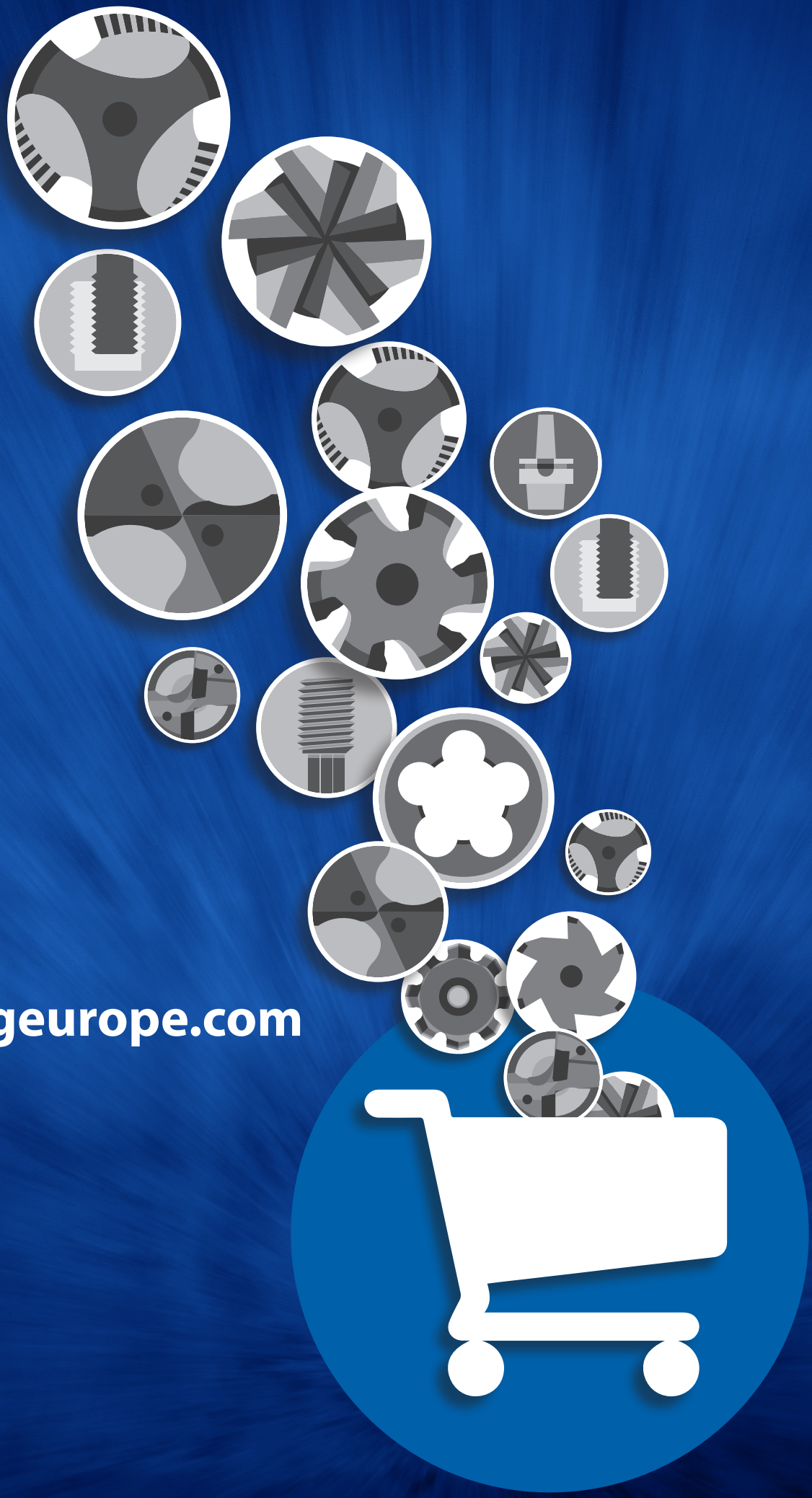

www.osgeurope.com

SWEDEN

Branch office of OSG SCANDINAVIA
Singelgatan 7
212 28 Malmö
Sweden
Tel: +46 40 41 22 55
osg@osg-scandinavia.com

OSG SCANDINAVIA

(For Scandinavian countries)
Langebjergvaenget 16
4000 Roskilde
Denmark
Tel: +45 46 75 65 55
osg@osg-scandinavia.com

OSG NETHERLANDS

Bedrijfsweg 5
3481 MG Harmelen
The Netherlands
Tel: +31 348 44 2764
info@osg-nl.com

OSG UK

Kelsey Close, Attleborough Fields Ind Est,
CV11 6RS, Nuneaton
United Kingdom
Tel: +44 (0) 1827 720 013
uk_sales@osg-uk.com

OSG EUROPE LOGISTICS

Avenue Lavoisier 1
B-1300 Z.I. Wavre - Nord
Belgium
Tel: +32 10 23 05 07
info@osgeurope.com

OSG BELUX
Avenue Lavoisier 1
B-1300 Z.I. Wavre - Nord
Belgium
Tel: +32 10 23 05 11
info@osg-belgium.com

OSG IBÉRICA

Bekolarra 4
E - 01010 Vitoria-Gasteiz
Spain
Tel: +34 945 242 400
osg.iberica@osg-ib.com

OSG FRANCE

Parc Icade, Paris Nord 2
Immeuble "Le Rimbaud"
22 Avenue des Nations
CS66191 - 93420 Villepinte
France
Tel: +33 1 49 90 10 10
sales@osg-france.com

OSG ITALY

Via Ferrero, 65 A/B
I - 10098 Rivoli
Italy
Tel: +39 0117705211
info@osg-italia.it

OSG IN EUROPE

CZECH REPUBLIC, SLOVAKIA, HUNGARY

OSG Europe Logistics S.A.
Slovakia, organizačná zložka
Račianska 22/A, Bratislava 831 02
Slovakia
Tel.: +421 24 32 91 295
info@osgeurope.com

OSG POLAND

ul. Spółdzielcza 57
05-074 Halinów
Polska
Tel: +22 760 82 71
Mob. +48 570 677 711
osg@osg-poland.com

OSG ROMANIA SRL

25C, Bucuresti-Magurele Street (Sector 5)
051431 Bucuresti
România
Tel: +40 21 322 07 47
info@osgromania.ro

OSG TURKEY

Rami Kişla Cad.No:56 Eyüp
Istanbul 34056
Turkey
Tel: +90 212 565 24 00
Fax: +90 212 565 44 00
info@osg-turkey.com

Vischer & Bolli AG

Machining and Workholding
Im Schossacher 17
CH-8600 Dübendorf
Switzerland
Tel.: +41 44 802 15 15
info@vb-tools.com

OSG GERMANY

Karl-Ehmann-Str. 25
D - 73037 Göppingen
Germany
Tel: +49 7161 6064 - 0
Fax: +49 7161 6064 - 444
info@osg-germany.de

shaping your dreams

OSG EUROPE LOGISTICS
Avenue Lavoisier 1
B-1300 Z.I. Wavre - Nord - Belgium
Tel: +32 10 23 05 07
info@osgeurope.com

OSG POLAND Sp. z.o.o.
Spółdzielcza 57
05-074 Halinów - Poland
Tel: +22 760 82 71
osg@osg-poland.com

OSG ROMANIA SRL
25C, Bucuresti-Magurele Street (Sector 5)
051431 Bucuresti - România
Tel: +40 21 322 07 47
info@osgromania.ro

OSG BELUX
Avenue Lavoisier 1
B-1300 Z.I. Wavre - Nord - Belgium
Tel: +32 10 23 05 11
info@osg-belgium.com

OSG GERMANY
Karl-Ehmann-Str. 25
D - 73037 Göppingen - Germany
Tel: +49 7161 6064 - 0
Fax: +49 7161 6064 - 444
info@osg-germany.de

AUSTRIA
Branch office of OSG GERMANY
Messestraße 11
A-6850 Dornbirn
Tel: +49 7161 6064-0
info@osg-germany.de

OSG FRANCE
Parc Icade, Paris Nord 2
Immeuble "Le Rimbaud"
22 Avenue des Nations
CS66191 - 93420 Villepinte - France
Tel: +33 1 49 90 10 10
sales@osg-france.com

OSG SCANDINAVIA
(For Scandinavian countries)
Langebjergvaenget 16
4000 Roskilde - Denmark
Tel: +45 46 75 65 55
osg@osg-scandinavia.com

OSG ITALIA
Via Ferrero, 65 A/B3
I - 10098 Rivoli - Italy
Tel: +39 0117705211
info@osg-italia.it

OSG NETHERLANDS
Bedrijfsweg 5 - 3481 MG Harmelen
Tel: +31 348 44 2764
info@osg-nl.com

SWEDEN
Branch office of OSG SCANDINAVIA
Singelgatan 7
212 28 Malmö - Sweden
Tel: +46 40 41 22 55
osg@osg-scandinavia.com

Vischer & Bolli AG
Machining and Workholding
Im Schossacher 17
CH-8600 Dübendorf
T +41 44 802 15 15
info@vb-tools.com

OSG UK
Kelsey Close, Attleborough Fields Ind Est,
CV11 6RS, Nuneaton, United Kingdom.
Tel: +44 1827 720 013
uk_sales@osg-uk.com

OSG IBERICA
Bekolarra 4
E - 01010 Vitoria-Gasteiz - Spain
Tel: +34 945 242 400
osg.iberica@osg-ib.com

CZECH, SLOVAKIA, HUNGARY
OSG Europe Logistics S.A.
Slovakia organizacna zlozka
Racianská 22/A, SK-83102 Bratislava
Slovakia
Tel. +421 24 32 91 295
Orders-osgsvk@osgeurope.com

OSG TURKEY
Rami Kişla Cad.No:56 Eyüp
Istanbul 34056 - Turkey
Tel+90 212 565 24 00
Fax: +90 212 565 44 00
info@osg-turkey.com

OSG EUROPE LOGISTICS S.A.

08/2024 - All rights reserved. © OSG Europe 2024

The contents of this catalogue are provided to you for viewing only. They are not intended for reproduction either in part or in whole in this or other medium. They cannot be copied, used to create derivation work or used for any reason, by means without the express, written permission of the copyright owner. If prices are stated, they are netto unit-prices and any eventual tax(es) have to be added. The company is not responsible for any printing error in technical, price and/or any other data.

Tool specifications subject to change without notice.

www.osgeurope.com